TIDAL
WAVE
AUTO SPA

TIDAL
WAVE
AUTO SPA

ALL GLAZING IS "CLEAR" GLAZING.

PREFERRED
VIEW FROM SITE – SOUTH
SCALE: 3/16"=1'-0"

2562 SF WALL SURFACE EXCLUDING GABLES, ROOF, CUPOLA, & OPEN BAYS
502 S.F. GLAZING (WINDOWS AND SF ENTRY)
1834 S.F. EIFS OR HARD COAT STUCCO
162 S.F. STONE
64 S.F. SPLIT FACE BLOCK

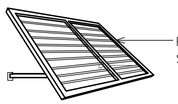

PREFINISHED METAL SUNSHADE AWNING COLOR – ASH

PERSPECTIVE VIEW
SUNSHADE

PREFERRED
VIEW FROM JOHNSON DRIVE – NORTH
SCALE: 3/16"=1'-0"

OVERALL FRONT FACADE VENEER CALCULATIONS:
3850 SF WALL SURFACE EXCLUDING GABLES, ROOF, CUPOLA.
2337 S.F. GLAZING (WINDOWS AND SF ENTRY)
313 S.F. EIFS OR HARD COAT STUCCO (LESS THAN 25% OF FRONTAGE AREA)
1000 S.F STONE
200 S.F. SPLIT FACE BLOCK

FIRST STORY FRONT FACADE VENEER CALCULATIONS:
2,080 S.F WALL SURFACE EXCLUDING GABLES, ROOF, CUPOLA.
1393 S.F. GLAZING (WINDOWS AND SF ENTRY)
100 S.F. EIFS OR HARD COAT STUCCO ACCENT (LESS THAN 25% OF FRONTAGE AREA)
387 S.F STONE
200 S.F. SPLIT FACE BLOCK

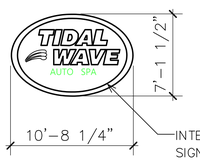

INTERNALLY LUMINATED SIGNAGE. SEE ATTACHED DETAIL PAGE BY: COMPLETE SIGNS, DOTHAN ALABAMA.

SIGN
SCALE: 3/16"=1'-0"

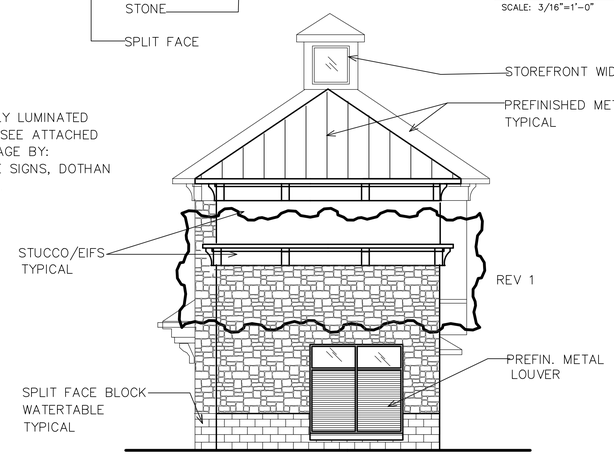

PREFERRED
SIDE ELEVATION WEST
SCALE: 3/16"=1'-0"

452 SF WALL SURFACE EXCLUDING GABLES, ROOF, CUPOLA.
60 S.F. GLAZING (WINDOWS AND LOUVER)
220 S.F. EIFS OR HARD COAT STUCCO
122 S.F. STONE
50 S.F. SPLIT FACE BLOCK

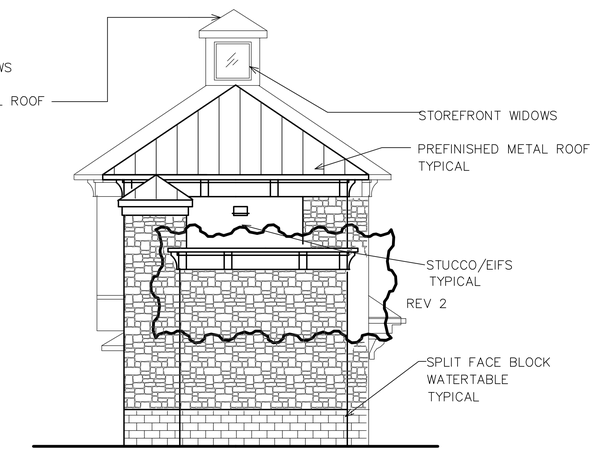

PREFERRED
SIDE ELEVATION EAST
SCALE: 3/16"=1'-0"

514 SF WALL SURFACE EXCLUDING GABLES, ROOF, CUPOLA.
0 S.F. GLAZING
164 S.F. EIFS OR HARD COAT STUCCO
280 S.F. STONE
70 S.F. SPLIT FACE BLOCK

PROPOSED REVISIONS:
THESE ITEMS DO NOT IMPACT THE OVERALL MATERIALS AND GLAZING AREA CALCULATIONS.
THESE ITEMS DO NOT INCREASE THE ORGINAL ARCHITECTURAL BUILDING FOOTPRINT.

REV 1 IN LIEU OF SLOPING METAL ROOF AT WEST END 1 STORY AREA, PROVIDE FLAT ROOF AREA WITH PARAPET WALLS SCREENING MECHANICAL EQUIPMENT.

REV 2 IN LIEU OF UNCOVERED EQUIPMENT ENCLOSURE AT EAST END, PROVIDE ENCLOSED EQUIPMENT ROOM WITH PARAPET WALLS SCREENING MECHANICAL EQUIPMENT LOCATED ABOVE.

5/21/18

ARCHITECT:
M. TODD ALBRITTON
ARCHITECT
202 EAST MAIN STREET
THOMASTON, GEORGIA
770-550-3275
mtoddalbrittonarchitect@gmail.com
KANSAS REGISTERED ARCHITECT
#6993

A NEW
TIDAL WAVE AUTO SPA
MISSION, KANSAS

TIDAL WAVE AUTO SPA

SHEET:
A4.1R
REVISED

ALL GLAZING IS "CLEAR" GLAZING.

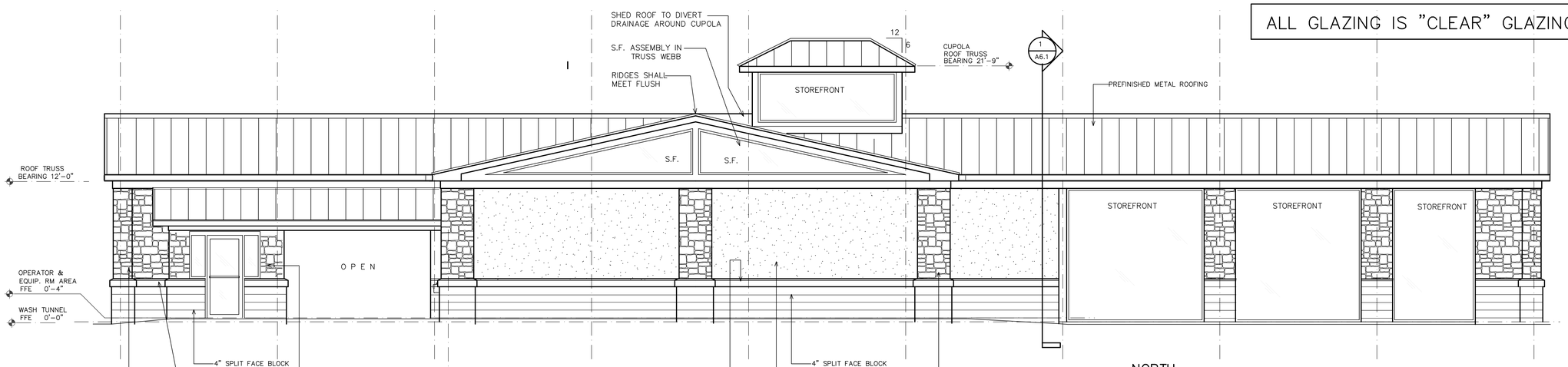

1320 SF WALL SURFACE EXCLUDING GABLES, ROOF, CUPOLA, & OPEN BAYS
350 S.F. GLAZING (WINDOWS AND SF ENTRY)
200 S.F. STONE
258 S.F. SPLIT FACE BLOCK (WATERTABLE)
512 S.F. STUCCO

NORTH SIDE ELEVATION (1 / A2.1)
SCALE: 1/4"=1'-0"

NOTE:
STOREFRONT PROVIDER TO PROVIDE FRAMES, GLAZING, AND ATTACHMENT METHODS TO WITHSTAND 25.6 PSI PRESSURE

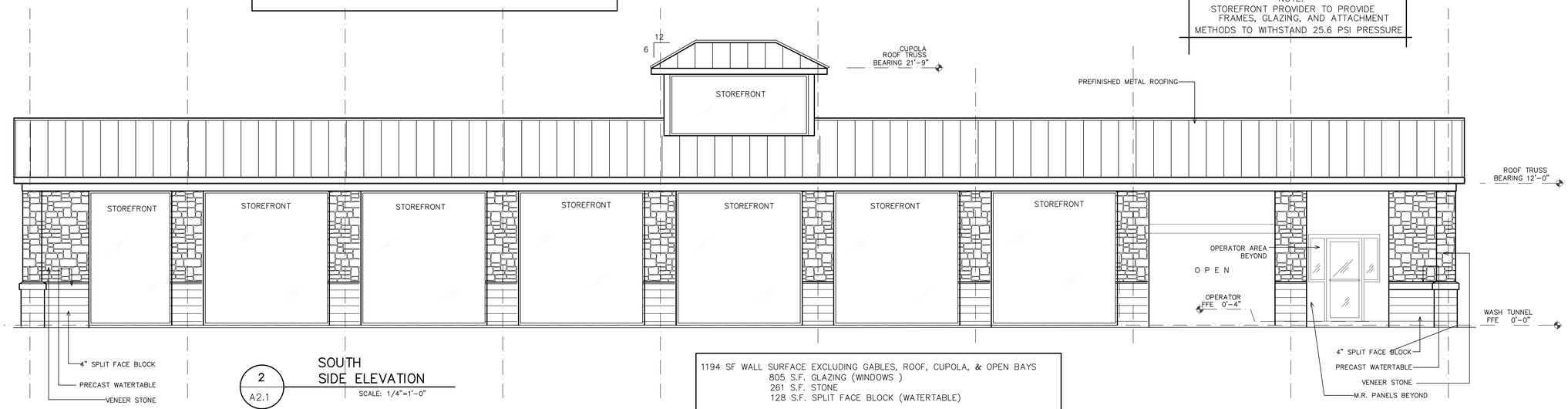

SOUTH SIDE ELEVATION (2 / A2.1)
SCALE: 1/4"=1'-0"

1194 SF WALL SURFACE EXCLUDING GABLES, ROOF, CUPOLA, & OPEN BAYS
805 S.F. GLAZING (WINDOWS)
261 S.F. STONE
128 S.F. SPLIT FACE BLOCK (WATERTABLE)

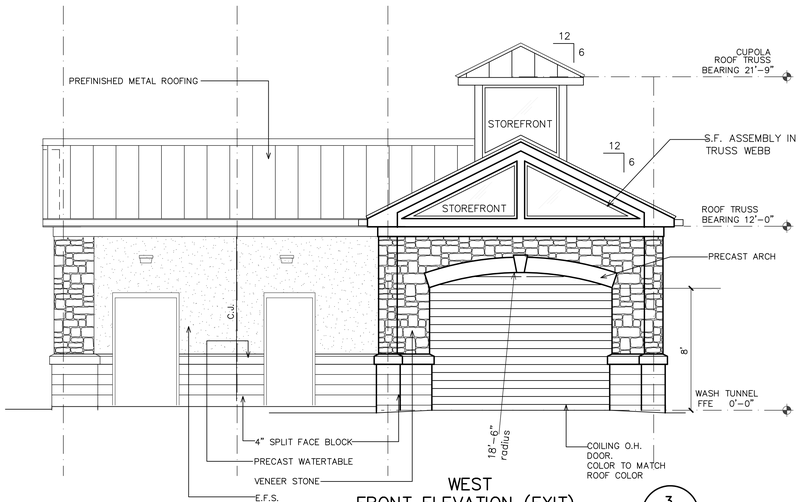

WEST FRONT ELEVATION (EXIT) (3 / A2.1)
SCALE: 1/4"=1'-0"

331 SF WALL SURFACE EXCLUDING GABLES, ROOF, CUPOLA, & OPEN BAYS
55 S.F. WINDOW AND DOORS
115 S.F. STONE
85 S.F. SPLIT FACE (WATERTABLE)
76 S.F. STUCCO

ARCHITECT:
M TODD ALBRITTON
ARCHITECT
202 EAST MAIN STREET
THOMASTON, GEORGIA
770-550-3275
mtoddalbrittonarchitect@gmail.com
KANSAS REGISTERED ARCHITECT
#6993

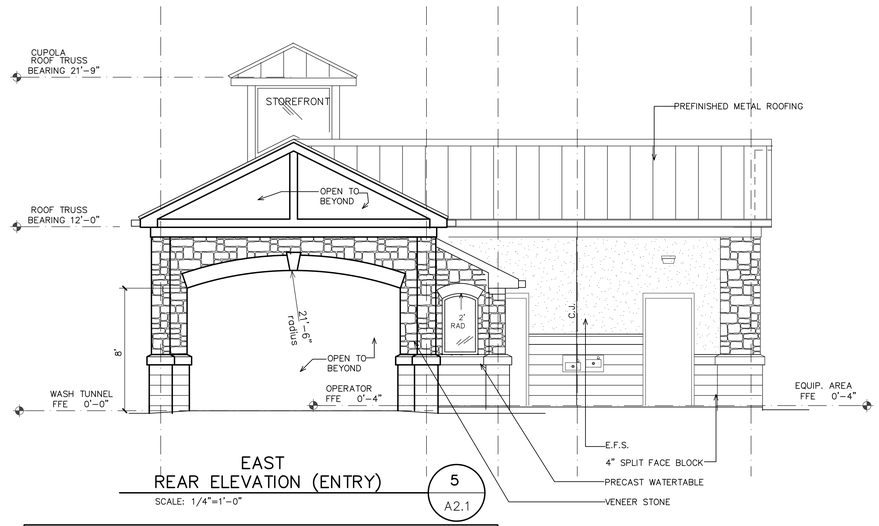

EAST REAR ELEVATION (ENTRY) (5 / A2.1)
SCALE: 1/4"=1'-0"

331 SF WALL SURFACE EXCLUDING GABLES, ROOF, CUPOLA, & OPEN BAYS
55 S.F. WINDOW AND DOORS
115 S.F. STONE
85 S.F. SPLIT FACE (WATERTABLE)
76 S.F. STUCCO

TIDAL WAVE AUTO SPA
CAR WASH FACILITY
MISSION, KANSAS

11/2/17

SHEET:
A2.1
OF: 10

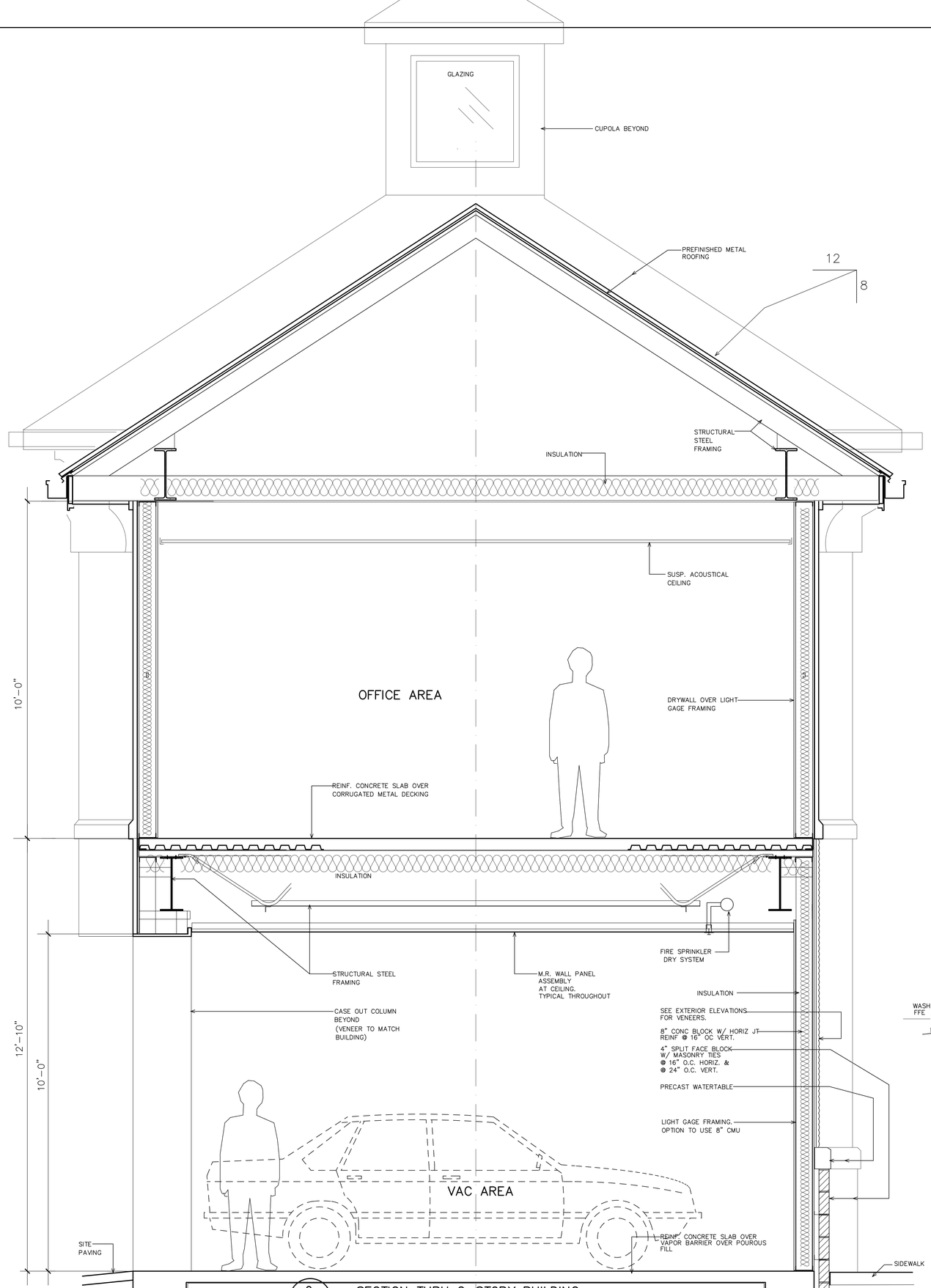

2 A6.1 SECTION THRU 2-STORY BUILDING

SCALE: 3/4"=1'-0"

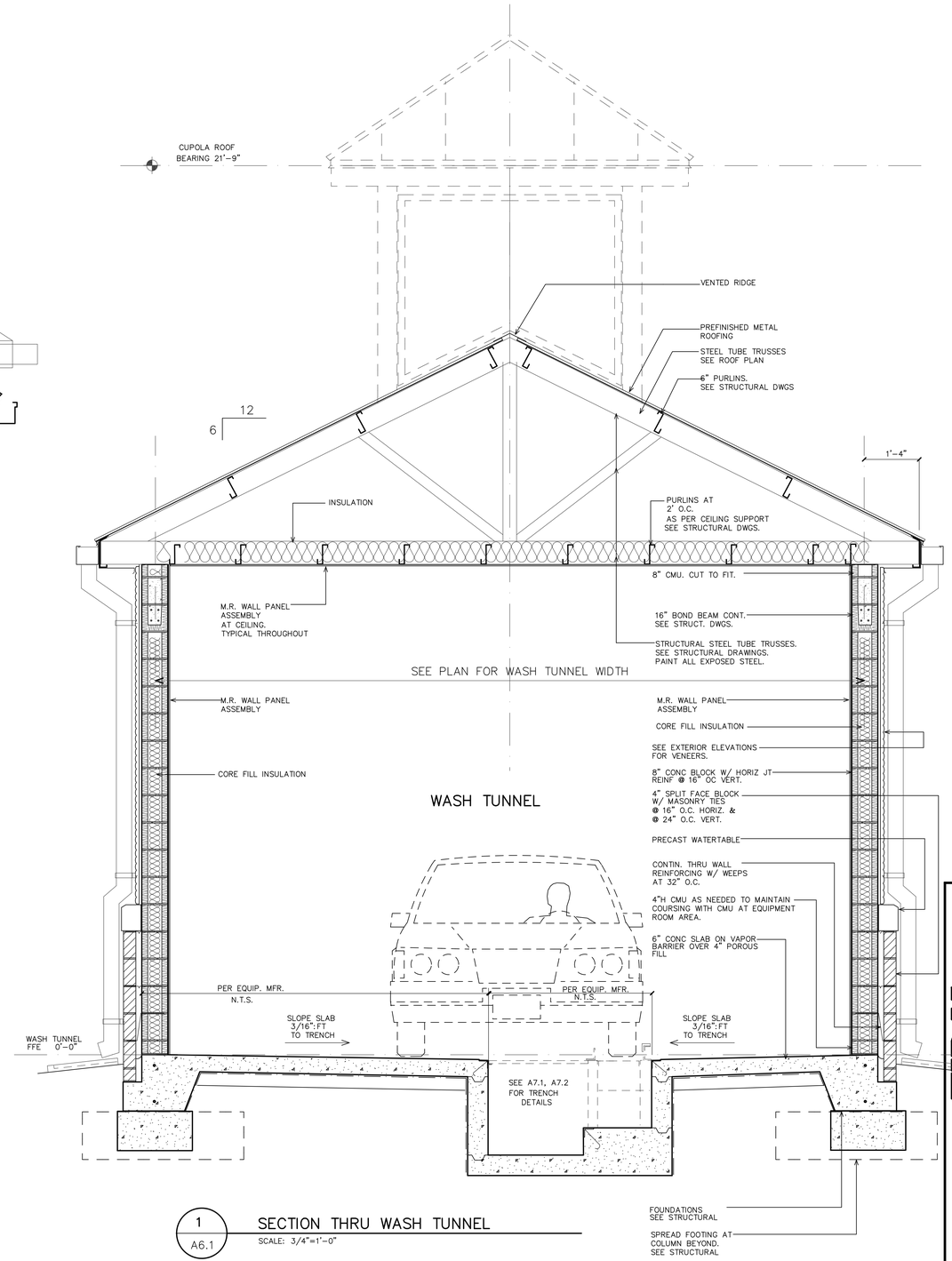

1 A6.1 SECTION THRU WASH TUNNEL

SCALE: 3/4"=1'-0"

5/21/18

A NEW
TIDAL WAVE AUTO SPA
MISSION, KANSAS

TIDAL WAVE AUTO SPA

SHEET:
A6.1

TIDAL WAVE AUTO SPA

EXTERIOR FINISHES

GLAZING - CLEAR

STANDING SEAM METAL ROOF
COLOR: ASH

PRECAST WATERTABLE COURSE
OLD CASTLE - BUFF

STONE VENEER
SOUTHERN LEDGESTONE
COLOR - BUCKS COUNTY

METAL FASCIA
COLOR - ASH

SPLIT FACE MASONRY
OLD CASTLE -

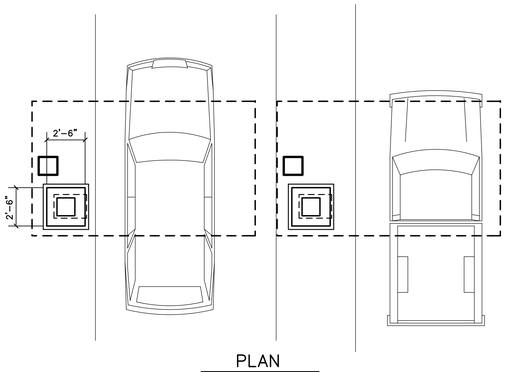

PLAN
1/4"=1'-0"

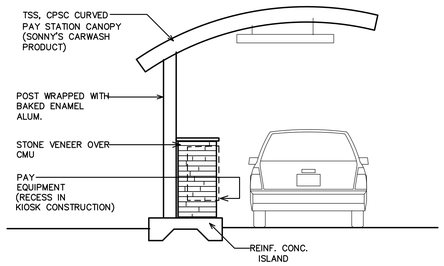

ELEVATION
1/4"=1'-0"

PAY KIOSK

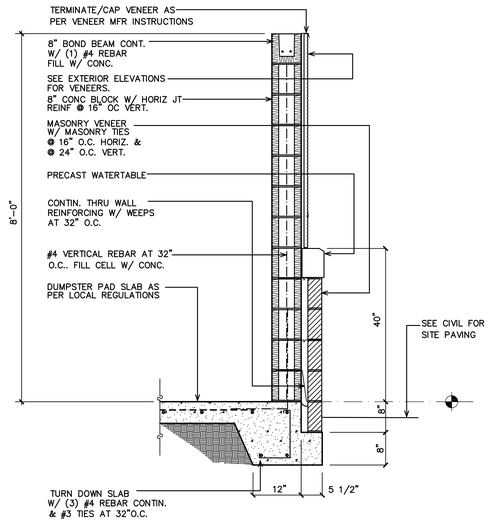

SECTION

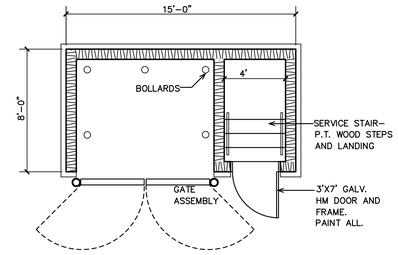

PLAN – DUMPSTER ENCLOSURE
1/4"=1'-0"

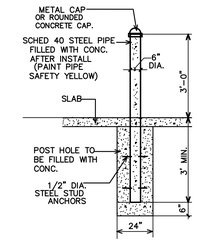

BOLLARD
1/4"=1'-0"

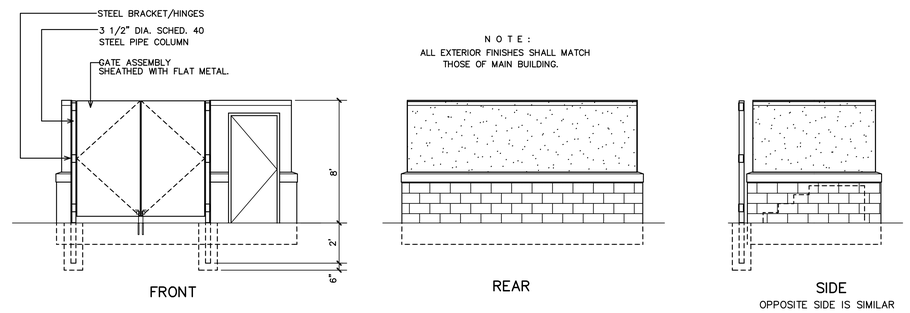

N O T E :
ALL EXTERIOR FINISHES SHALL MATCH THOSE OF MAIN BUILDING.

ELEVATIONS – DUMPSTER ENCLOSURE
1/4"=1'-0"

DUMPSTER ENCLOSURE

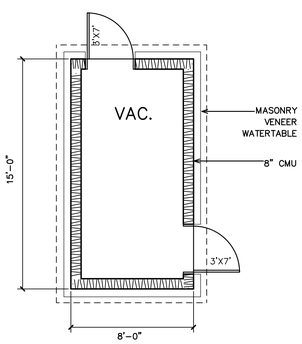

FLOOR PLAN
1/4"=1'-0"

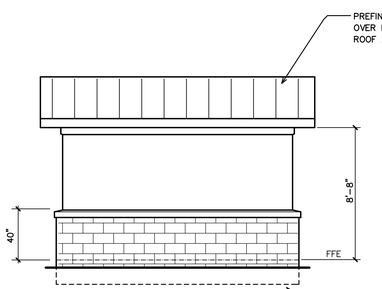

ELEVATION
1/4"=1'-0"

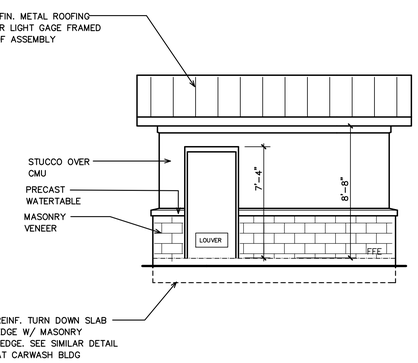

ELEVATION
1/4"=1'-0"

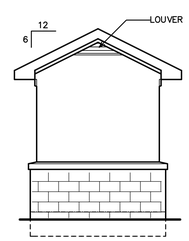

ELEVATION
1/4"=1'-0"

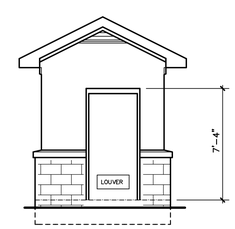

ELEVATION
1/4"=1'-0"

VACUUM ENCLOSURE

ARCHITECT:
M. TODD ALBRITTON
ARCHITECT
202 EAST MAIN STREET
THOMASTON, GEORGIA
770–550–3275
mtoddalbrittonarchitect@gmail.com
KANSAS REGISTERED ARCHITECT
#6993

A NEW
TIDAL WAVE AUTO SPA
MISSION, KANSAS

TIDAL WAVE AUTO SPA

SHEET:
A5.1

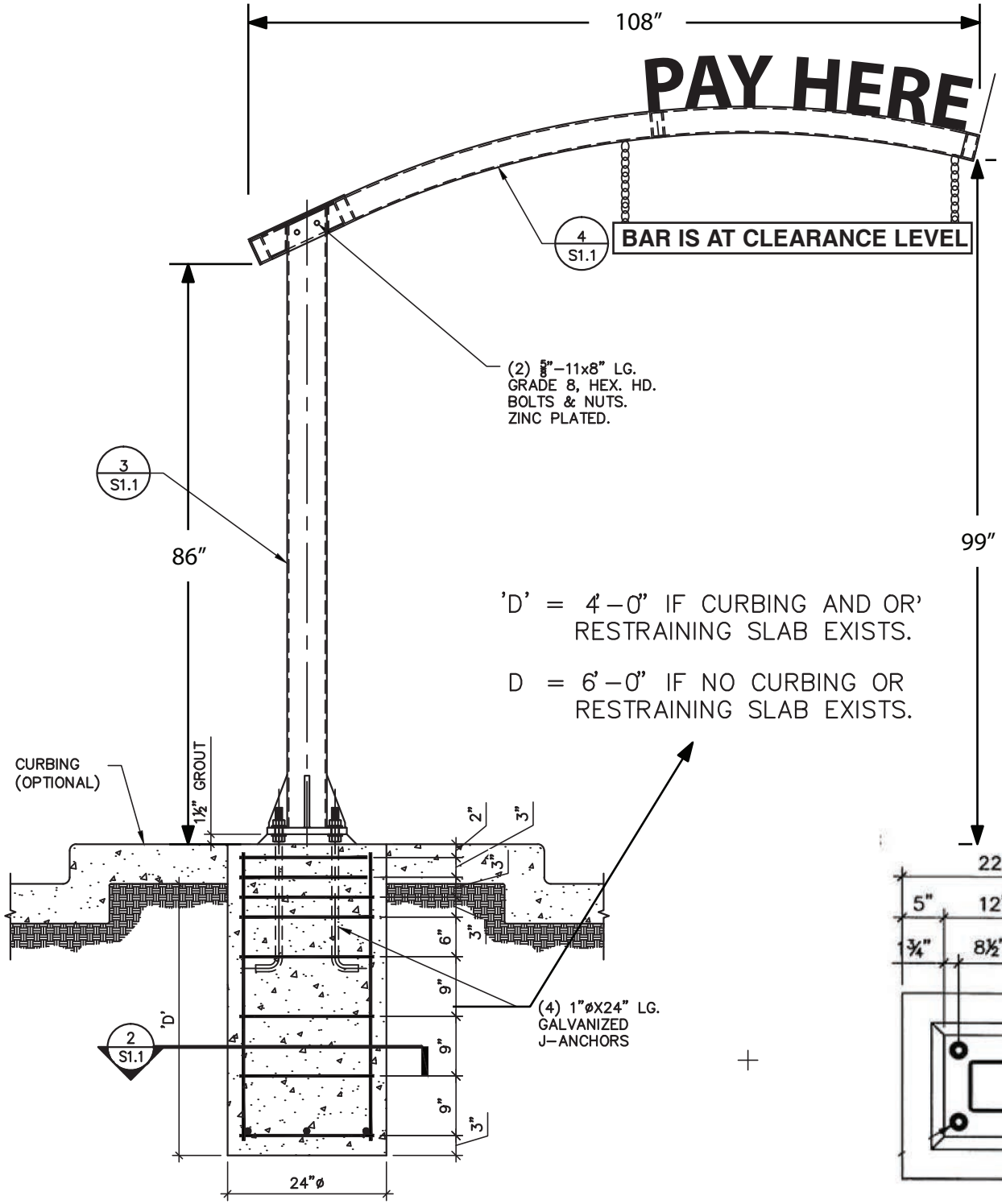

COLOR :
ASH

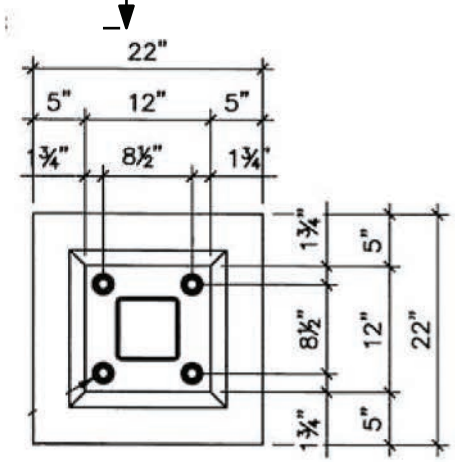

PART # - CPSC

SPECIFICATIONS

Top is heavy duty aluminum tubing 2" x 4" x .250" wrapped with baked enamel aluminum.

Post is heavy steel 6" x 6" x .250"

NOTES:

UL FILE NUMBER: UXYT.E180559

JOB NUMBER

DATE

11450 Stephens Rd
Warren, MI 48089
Phone::800-682-7446
www.tsscws.com

TIDAL WAVE
Receipt
TIDAL WAVE

SGS

Test Report No. 3636033TX-01 Date: December 08, 2014

Flame Propagation of Textiles and Films
NFPA 701 Test Method 2 (Flat Specimens) - 2010 Edition

Blue

Specimen	Dimensions (inches)	Char Length (inches)	After Flame (seconds-nearest 0.5)	Flaming Residues (seconds-nearest 0.5)
1	5x47	9.0	0.0	0.0
2	5x47	10.0	0.0	0.0
3	5x47	8.0	0.0	0.0
4	5x47	9.1	0.0	0.0
5	5x47	9.4	0.0	0.0
6	5x47	8.4	0.0	0.0
7	5x47	9.6	0.0	0.0
8	5x47	10.1	0.0	0.0
9	5x47	8.8	0.0	0.0
10	5x47	8.4	0.0	0.0

Observations:
Slight charring; s/rinking.

Requirements:
A material tested in single sheets shall not continue flaming for more than 2 seconds after the test flame is removed from contact with the specimen. The char length of any single flat specimen shall not exceed 17.1 inches. Portions or residues of material being tested that break or drip from the specimen shall not continue to flame for more than 2 seconds after reaching the floor of the test apparatus.

Conclusion:
The submitted sample **meets** the requirements of NFPA 701 Test Method 2 (Flat Specimens) - 2010 Edition, when tested in its original state.

Selected tests as requested by applicant against specified requirement / test request form / quotation.

*** End of Report ***

Signed for and on behalf of SGS North America Inc.

Prasianthi Alapati
Supervisor – Textile Laboratory

Greg S. Kolbeck
Manager – Textile Laboratory

This document is issued by the Company subject to its General Conditions of Service printed overleaf, available on request or accessible at http://www.sgs.com/en/Terms-and-Conditions.aspx and, for electronic format documents, subject to Terms and Conditions for Electronic Documents at http://www.sgs.com/en/Terms-and-Conditions/terms-e-document.aspx. Attention is drawn to the limitation of liability, indemnification and jurisdiction issues defined therein. Any holder of this document is advised that information contained hereon reflects the Company's findings at the time of its intervention only and within the limits of Client's instructions, if any. The Company's sole responsibility is to its Client and this document does not exonerate parties to a transaction from exercising all their rights and obligations under the transaction documents. This document cannot be reproduced except in full, without prior written approval of the Company. Any unauthorized alteration, forgery or falsification of the content or appearance of this document is unlawful and offenders may be prosecuted to the fullest extent of the law. Unless otherwise stated the results shown in this test report refer only to the sample(s) tested and such sample(s) are retained for a minimum of 45 days only.

SGS North America, Inc. | Consumer Testing Services 201 Fairfield Avenue, Fairfield, NJ 07004 | t (973) 575-5252 f (973) 575-7575 | www.sgs.com | Member of the SGS Group

DESIGN CRITERIA
2012 INTERNATIONAL BUILDING CODE WITH LOCAL AMENDMENTS
RISK CATEGORY: II
DEAD LOAD:
FABRIC: 0.50 PSF
SNOW LOAD:
GROUND SNOW LOAD: 5 PSF
LIVE LOAD:
ROOF LIVE LOAD: 5 PSF
WIND LOAD:
ULTIMATE DESIGN WIND SPEED: 115 MPH
NOMINAL DESIGN WIND SPEED: 90 MPH
WIND IMPORTANCE FACTOR: 1.0
WIND EXPOSURE CATEGORY: C
GUST EFFECT FACTOR: 0.85
INTERNAL PRESSURE COEFFICIENT (GCpi): 0
SEISMIC DESIGN:
SEISMIC IMPORTANCE FACTOR: 1.0
SEISMIC SITE CLASS: D
SEISMIC DESIGN CATEGORY: C
BASIC SEISMIC FORCE RESISTING SYSTEM: STEEL ORDINARY CANTILEVER COLUMN SYSTEM

OWNER NOTES
1. FABRIC MEMBRANE(S) MUST BE REMOVED IF LIVE LOAD/ROOF SNOW LOAD IS EXPECTED TO EXCEED 5 PSF AND/OR THE WIND SPEED IS EXPECTED TO EXCEED AN ULTIMATE DESIGN WIND SPEED OF 115 MPH OR A NOMINAL DESIGN WIND SPEED OF 90 MPH.
2. THE OWNER ACCEPTS FULL RESPONSIBILITY OF REMOVING THE FABRIC FROM THE STEEL FRAME WHEN ANY OR ALL OF THESE CONDITIONS MAY OCCUR.
3. THE STEEL STRUCTURE WITH THE FABRIC REMOVED IS DESIGNED TO WITHSTAND DEAD LOADS, ROOF LIVE LOADS, SNOW LOADS, SEISMIC LOADS AND WIND SPEEDS PER THE LOCAL CODE REQUIREMENTS.

GENERAL NOTES
1. FABRIC MEETS NFPA 701-04.
2. ALL EXPOSED STEEL TO BE POWDERCOATED.

FOUNDATION DESIGN
CONCRETE COMPRESSIVE STRENGTH AFTER 28 DAYS: 3,000 PSI
STEEL REINFORCEMENT: ASTM-A615, GRADE 60
VERTICAL FOUNDATION PRESSURE: 1,500 PSF
LATERAL BEARING PRESSURE: 100 PSF/F

FOUNDATION NOTES:
1. THE FOUNDATION DESIGN IS BASED ON TABLE 1806.2 OF THE BUILDING CODE, CLASS 5 SOIL MATERIAL. IF DIFFERENT SOIL CONDITIONS ARE ENCOUNTERED, IT IS RECOMMENDED THAT A SITE SPECIFIC GEOTECHNICAL REPORT IS CONDUCTED TO DETERMINE THE LOAD BEARING VALUES OF THE SOIL.
2. FROST DEPTH: 12" BELOW FINISHED GRADE

MATERIALS
ALL MATERIALS LISTED BELOW MAY NOT BE SPECIFIC TO THIS PROJECT.

MEMBER TYPE	ASTM	MIN. YIELD STRENGTH
W SHAPES	A992	50 KSI
RECTANGULAR HSS TUBES	A500(GRADE C)	50 KSI
SQUARE HSS TUBES	A500(GRADE C)	50 KSI
ROUND HSS TUBES	A500(GRADE B)	42 KSI
SCHEDULE PIPE	A53 (GRADE B)	35 KSI
ROUND MECHANICAL TUBING	A519	42 KSI
MISCELLANEOUS PLATES/SHAPES	A36	36 KSI
CONNECTION BOLTS	A325	92 KSI
HEADED ANCHOR BOLTS	F1554	36 KSI
HOOKED ANCHOR BOLTS	A307	36 KSI

¼" STAINLESS STEEL CABLE SHALL HAVE A NOMINAL STRENGTH OF 6,400 LBS.

TABLE 1

CANTILEVER STRUCTURE	BEAM HEIGHT	COLUMN SIZE	FRAME TUBE SIZE	FOOTING SIZE	FOOTING REINF.	BEAM SIZE	BASE PLATE SIZE	BRACE SIZE
20' x 20' Surface Mount	9'-0" Above Grade	8" x 6" 1/4" Wall	2.88" OD 12 Gauge	4.0' x 4.0' 3.0' Deep	(4)#5 EW Top & Bot	6" x 4" 3/16" Wall	16" x 14" 3/4" Thk.	1.9" OD 14 Gauge

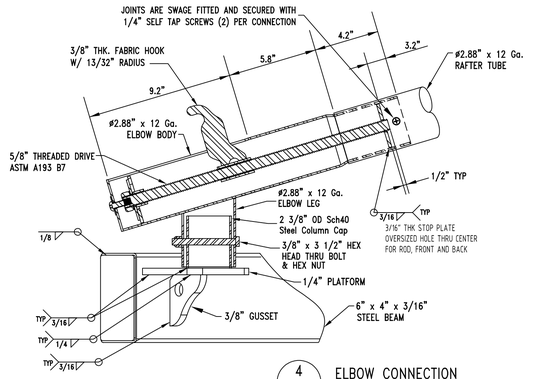

4/1 ELBOW CONNECTION
ALL HARDWARE STAINLESS STEEL

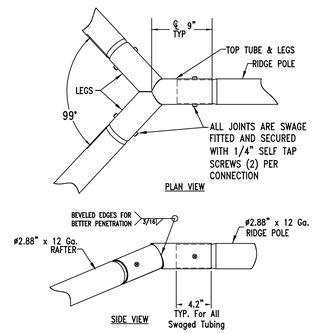

3/1 "Y" JOINER CONNECTION
ALL HARDWARE STAINLESS STEEL

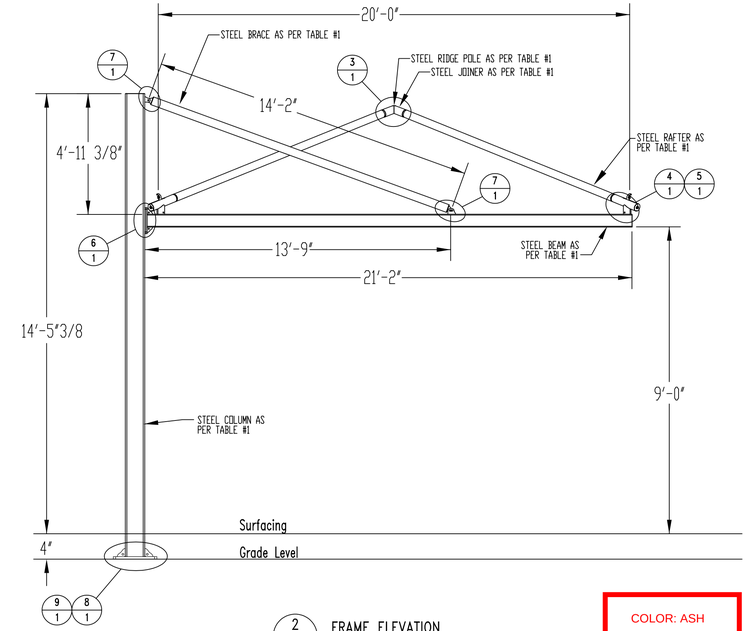

2/1 FRAME ELEVATION
CABLE AND HARDWARE STAINLESS STEEL

COLOR: ASH

5/1 GLIDE ELBOW CONSTRUCTION

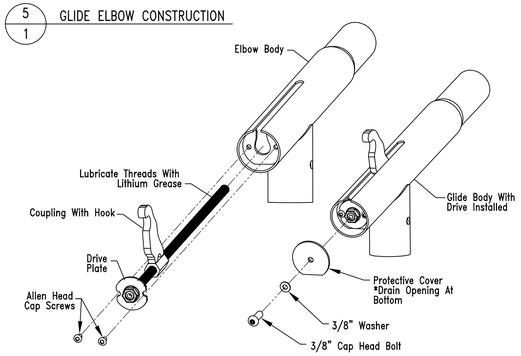

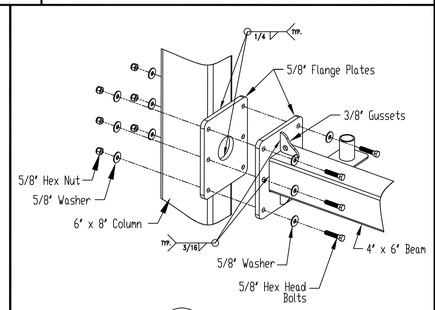

6/1 BEAM CONNECTION
ALL HARDWARE STAINLESS STEEL

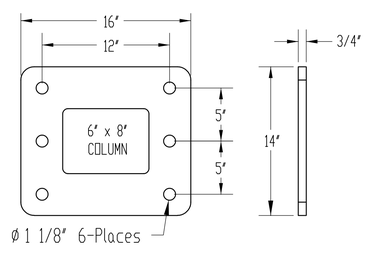

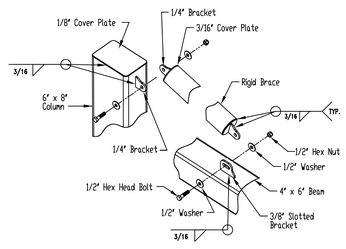

7/1 BRACE CONNECTION
ALL HARDWARE STAINLESS STEEL

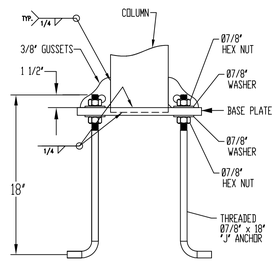

8/1 BASE PLATE & ANCHOR DETAIL
ALL ANCHOR HARDWARE HOT DIPPED GALVANIZED

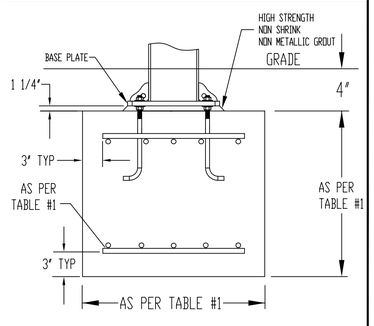

9/1 FOOTING DETAIL

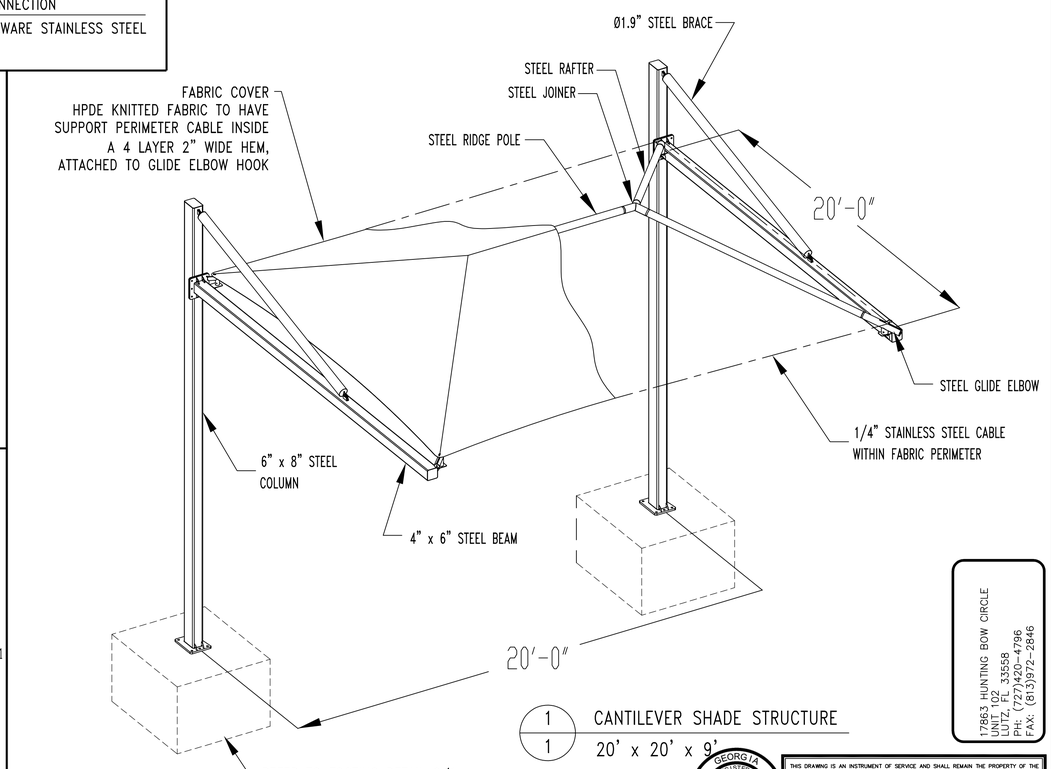

1/1 CANTILEVER SHADE STRUCTURE
20' x 20' x 9'

OCCUPANCY GROUP(S): U
TYPE OF CONSTRUCTION: V-B

17863 HUNTING BOW CIRCLE
UNIT 102
LUTZ, FL 33558
PH: (727)420-1796
FAX: (813)972-2846

GEORGIA REGISTERED No. 28174 PROFESSIONAL ENGINEER RAM A. GOEL

THIS DRAWING IS AN INSTRUMENT OF SERVICE AND SHALL REMAIN THE PROPERTY OF THE ENGINEER. IT SHALL NOT BE REPRODUCED, PUBLISHED OR USED IN ANY WAY WITHOUT THE WRITTEN CONSENT OF THE ENGINEER. COPYRIGHT © 2018 RAM A. GOEL

THIS IS TO CERTIFY THAT I HAVE REVIEWED THIS PLAN AND FOUND TO BE IN COMPLIANCE WITH INTERNATIONAL BUILDING CODE LATEST EDITION.

03-15-18
RAM A. GOEL, Ph.D., P.E. #28174
COPIES OF THESE PLANS ARE NOT VALID UNLESS EMBOSSED WITH THE SIGNING ENGINEER'S SEAL

SUPERIOR RECREATIONAL PRODUCTS Shade

Superior Shade
150 Adamson Industrial Blvd.
Carrollton, GA
30117

STATE OF GEORGIA

TIDAL WAVE – DUBLIN
2105B Veteran Blvd
Dublin, GA
31021

COPY RIGHT:
THIS PLAN/DRAWING IS THE EXCLUSIVE PROPERTY OF THE MANUFACTURER AND MAY NOT BE USED OR REPRODUCED WHOLE OR IN PART WITHOUT THE WRITTEN PERMISSION FROM THE MANUFACTURER.

Revisions:

	Date:	By:

Drawn:	J.Hilderbrand
Date:	03/15/2018
Chkd:	
Date:	

#142422

1
Sheet No.

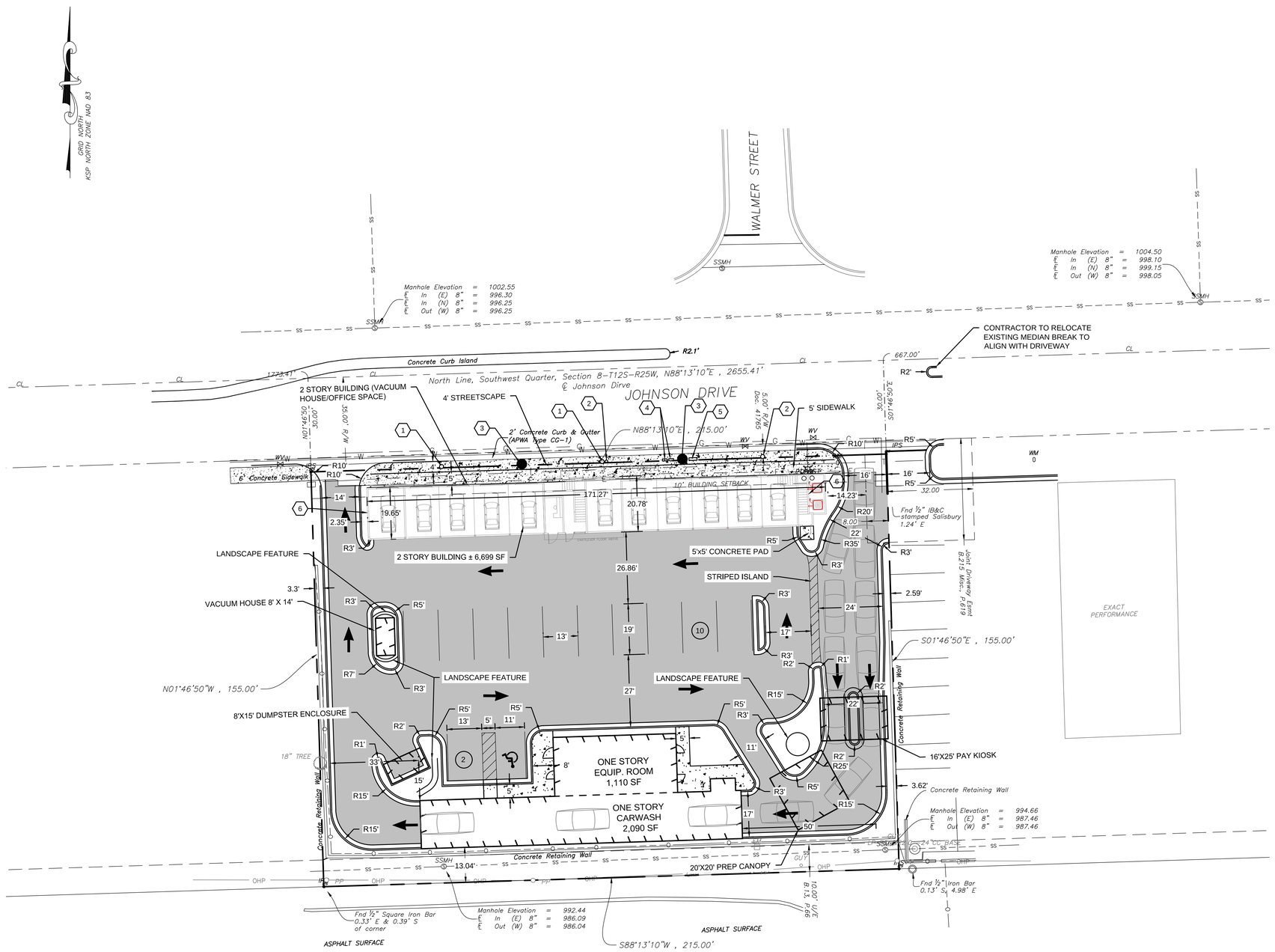

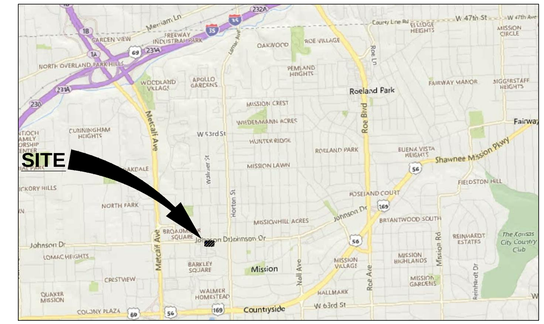

VICINITY MAP

N.T.S.

SITE INFORMATION:

ADDRESS: 6501 JOHNSON DRIVE, MISSION, KANSAS 66202

PROPERTY AREA: ±0.76 AC (33,105.60 SF)

PROPERTY ZONING: CP-2B

BUILDING SETBACKS:
FRONT: 0'-10'
SIDE: 0'
REAR: 0'

PARKING NOTE

PARKING REQUIRED:
3.5 SPACE PER 1,000 SF
(3,250 / 1,000) X 3.5 = 12 SPACES

PARKING PROVIDE:
11 STANDARD SPACES
+ 1 HANDICAPPED SPACES
12 TOTAL SPACES

SITE LAYOUT AND STAKING NOTES

1. IF THE PLANS ARE NOT CLEAR OR DISCREPANCIES OCCUR, THE CONTRACTOR IS TO CONTACT EMC ENGINEERING SERVICES, INC AT 229-435-6133 FOR CLARIFICATION IMMEDIATELY.
2. ALL NORTHING AND EASTING ARE TO THE FACE OF CURB, EDGE OF BUILDING.
3. CONTRACTOR SHALL CAREFULLY EXAMINE ALL DOCUMENTS AND THE CONSTRUCTION SITE TO OBTAIN FIRST HAND KNOWLEDGE OF EXISTING CONDITIONS.
4. ENTIRE SITE SHALL BE DRESSED TO UNIFORM, WELL DRAINED AND VISUALLY APPEALING SURFACE WITH A MINIMUM TOPSOIL LAYER OF FOUR INCHES.
5. ALL STRIPING AND SIGNS SHALL CONFORM WITH THE GEORGIA DEPARTMENT OF TRANSPORTATION AND THE MANUAL ON UNIFORM TRAFFIC CONTROL DEVICES (MUTCD) LATEST EDITION. PARKING STALL STRIPPING TO BE YELLOW WITH BLUE HANDICAPPED STRIPPING
6. ALL HANDICAP PARKING SPACES AND ACCESSIBLE ROUTE SHALL CONFORM WITH THE AMERICAN WITH DISABILITY ACT DESIGN GUIDELINES AND SPECIFICATIONS LATEST EDITION.
7. DIMENSIONS AND CURVE RADII ARE GIVEN TO FACE OF CURB, WHERE CURB AND GUTTER IS SHOWN. OTHERWISE DIMENSIONS ARE GIVEN TO THE EDGE OF PAVEMENT. CONTRACTOR IS TO COORDINATE WITH THE ARCHITECTURAL PLANS AS TO THE BUILDING LAYOUT AND DIMENSIONS

HATCH LEGEND:

CONCRETE PAVEMENT

PROPOSED CONCRETE SIDEWALK

GENERAL NOTE:

1. ALL DEVELOPMENTS SHALL CONFORM TO THE REQUIREMENTS OF THE CITY OF MISSION'S STORM WATER MANAGEMENT CRITERIA INCORPORATED BY REFERENCE HEREIN.

STORMWATER NOTES:

EXISTING CONDITION

PERVIOUS AREA = ± 0.05 AC (7%)

IMPERVIOUS AREA = ± 0.71 AC (93%)

PROPOSED CONDITION

PERVIOUS AREA = ± 0.08 AC (11%)

IMPERVIOUS AREA = ± 0.68 AC (89%)

SPECIAL NOTES:

1. STREET LIGHTS 60' O.C. (SENTRY SCP LUMINAIRE / NEW YORK BLACK POST WITH TWO KEYSTONE RIDGE BASKET PLANTER PER POLE
2. TRASH RECEPTACLE (BLACK 36 GALLON STEELSITES RB-36 BY VICTOR STANLEY)
3. STREET TREES (30' O.C. WITH A NEENAH FOUNDRY TREE GRATE #R-8726
4. TWO BIKE LOOPS (CREATIVE PIPE: BLACK INVERTED "U" BIKE RACK)
5. BENCH (BLACK 72" SCARBOROUGH BY LANDSCAPE FORMS)
6. TIDAL WAVE CABINET SIGN ATTACHED TO BUILDING 8-10 FT ABOVE GROUND

Kansas 811
Know what's below. Call before you dig.

NO.	REVISION DESCRIPTION	BY	DATE
1	PRELIMINARY DEVELOPMENT PLAN	DEM	04/11/18
2	FINAL DEVELOPMENT PLAN	DEM	05/09/18
#	#	#	#
#	#	#	#
#	#	#	#
#	#	#	#
#	#	#	#
#	#	#	#

KANSAS
EMC ENGINEERING SERVICES,INC. No. E-2814
CERTIFICATION OF AUTHORIZATION

20' 10' 0' 20'
GRAPHIC SCALE: 1" = 20'

EMC ENGINEERING SERVICES, INC.
1344 US Hwy 19S, Suite A
Leesburg, GA 31763
Ph: (229) 435-6133
Fax: (229) 439-7979
albany@emc-eng.com
www.emc-eng.com
CIVIL
MARINE
ENVIRONMENTAL
OFFICE LOCATIONS: ALBANY, ATLANTA, AUGUSTA, BRUNSWICK, COLUMBUS, SAVANNAH, STATESBORO, AND VALDOSTA

SITE & STAKING PLAN

TIDAL WAVE AUTO SPA

PROPERTY ID #: KP69500001 0003
MISSION, JOHNSON COUNTY, KANSAS
Prepared for:
SHJ CONSTRUCTION GROUP

PROJECT NO.:	17-6044
DRAWN BY:	DEM
DESIGNED BY:	DEM
SURVEYED BY:	CFSE
SURVEY DATE:	05/30/2017
CHECKED BY:	BHB
SCALE:	1" = 20'
DATE:	05/14/2018

SHEET 1 OF 2

G:\2017\17-6044 SHJ - TIDAL WAVE JOHNSON DR MISSION, KS\DWG\17-6044C_B01.DWG 5/10/2018 1:13 PM

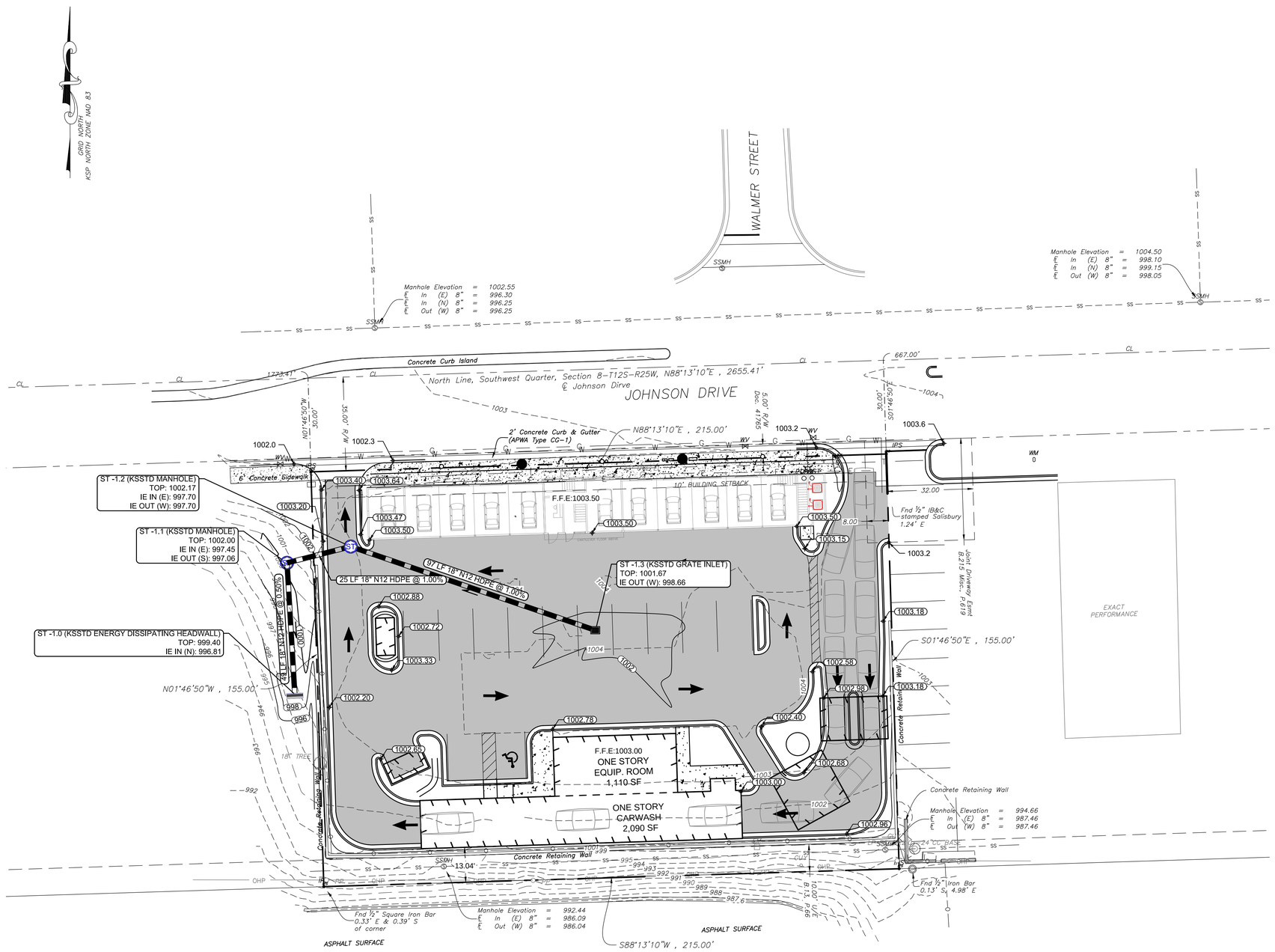

PAVING, GRADING, AND DRAINAGE NOTES

1. CONTRACTOR TO PROVIDE POSITIVE DRAINAGE AWAY FROM BUILDING.
2. ENTIRE SITE SHALL BE DRESSED TO UNIFORM, WELL DRAINED AND VISUALLY APPEALING SURFACE WITH A MINIMUM TOPSOIL LAYER OF FOUR INCHES.
3. MAXIMUM LONGITUDINAL SLOPE ON ALL ACCESSIBLE SIDEWALK SHALL BE 5.00%.
4. IT SHALL BE THE CONTRACTOR'S RESPONSIBILITY TO ENSURE THE SITE IS ADA ACCESSIBLE AS REQUIRED BY FEDERAL, STATE AND LOCAL GOVERNMENT.
5. FINISH GRADE ELEVATIONS INDICATE TOP OF PAVEMENT / FACE OF CURB UNLESS OTHERWISE NOTED.
6. REFER TO DETAILS FOR PAVEMENT TYPICAL SECTION.
7. SITE SHALL BE GRADED UNIFORMLY FOR POSITIVE DRAINAGE AS SHOWN FROM THE ELEVATIONS, PROPOSED CONTOURS, AND THE DRAINAGE SLOPE ARROWS.
8. MAXIMUM SIDEWALK CROSS SLOPE IS 2%. MAXIMUM SIDEWALK LONGITUDINAL SLOPE IS 5%. MAXIMUM PAVEMENT SLOPE IN HANDICAP PARKING AREA AND AISLE IS 2%. MAXIMUM HANDICAMP RAMP SLOPE IS 12H:1V.

UTILITY NOTES:

1. THE LOCATION OF ALL EXISTING UNDERGROUND UTILITIES AS SHOWN HEREON ARE BASED ON ABOVE-GROUND STRUCTURES AND IS APPROXIMATE AND SHOWN FOR INFORMATIONAL PURPOSES ONLY. NO CERTIFICATION IS MADE AS TO THE ACCURACY OR COMPLETENESS OF THE THIS INFORMATION.
2. ADDITIONAL BURIED UTILITIES / STRUCTURES MAY BE ENCOUNTERED. NO EXCAVATIONS WERE MADE DURING THE PROGRESS OF THIS SURVEY TO LOCATE BURIED UTILITIES / STRUCTURES.
3. BEFORE EXCAVATIONS ARE BEGUN, GIVE THREE WORKING DAYS NOTICE TO THE UTILITIES PROTECTION CENTER AT KANSAS 811 PRIOR TO ANY EXCAVATION IN ORDER THAT UNDERGROUND UTILITIES MAY BE LOCATED AND PROTECTED.

HATCH LEGEND:

CONCRETE PAVEMENT

EXISTING CONCRETE SIDEWALK

PROPOSED CONCRETE SIDEWALK

NO.	REVISION DESCRIPTION	BY	DATE
1	PRELIMINARY DEVELOPMENT PLAN	DEM	04/11/18
2	FINAL DEVELOPMENT PLAN	DEM	05/09/18
#	#	#	#
#	#	#	#
#	#	#	#
#	#	#	#
#	#	#	#

KANSAS
EMC ENGINEERING SERVICES,INC.
No. E-2814
CERTIFICATION OF AUTHORIZATION

20' 10' 0' 20'
GRAPHIC SCALE: 1" = 20'

EMC ENGINEERING SERVICES, INC.
1344 US Hwy 19S, Suite A
Leesburg, GA 31763
Ph: (229) 435-6133
Fax: (229) 439-7979
albany@emc-eng.com
www.emc-eng.com
CIVIL
MARINE
ENVIRONMENTAL
OFFICE LOCATIONS: ALBANY, ATLANTA, AUGUSTA, BRUNSWICK, COLUMBUS, SAVANNAH, STATESBORO, AND VALDOSTA

PAVING, GRADING, & DRAINAGE PLAN

TIDAL WAVE AUTO SPA

PROPERTY ID #: KP69500001 0003
MISSION, JOHNSON COUNTY, KANSAS
Prepared for:
SHJ CONSTRUCTION GROUP

PROJECT NO.:	17-6044
DRAWN BY:	DEM
DESIGNED BY:	DEM
SURVEYED BY:	CFSE
SURVEY DATE:	05/30/2017
CHECKED BY:	BHB
SCALE:	1" = 20'
DATE:	05/14/2018

SHEET 2 OF 2

Kansas 811
Know what's below. Call before you dig.

O:\2017\17-6044 SHJ - TIDAL WAVE JOHNSON DR MISSION, KS\DWG\17-6044C_B01.DWG 5/10/2018 1:13 PM

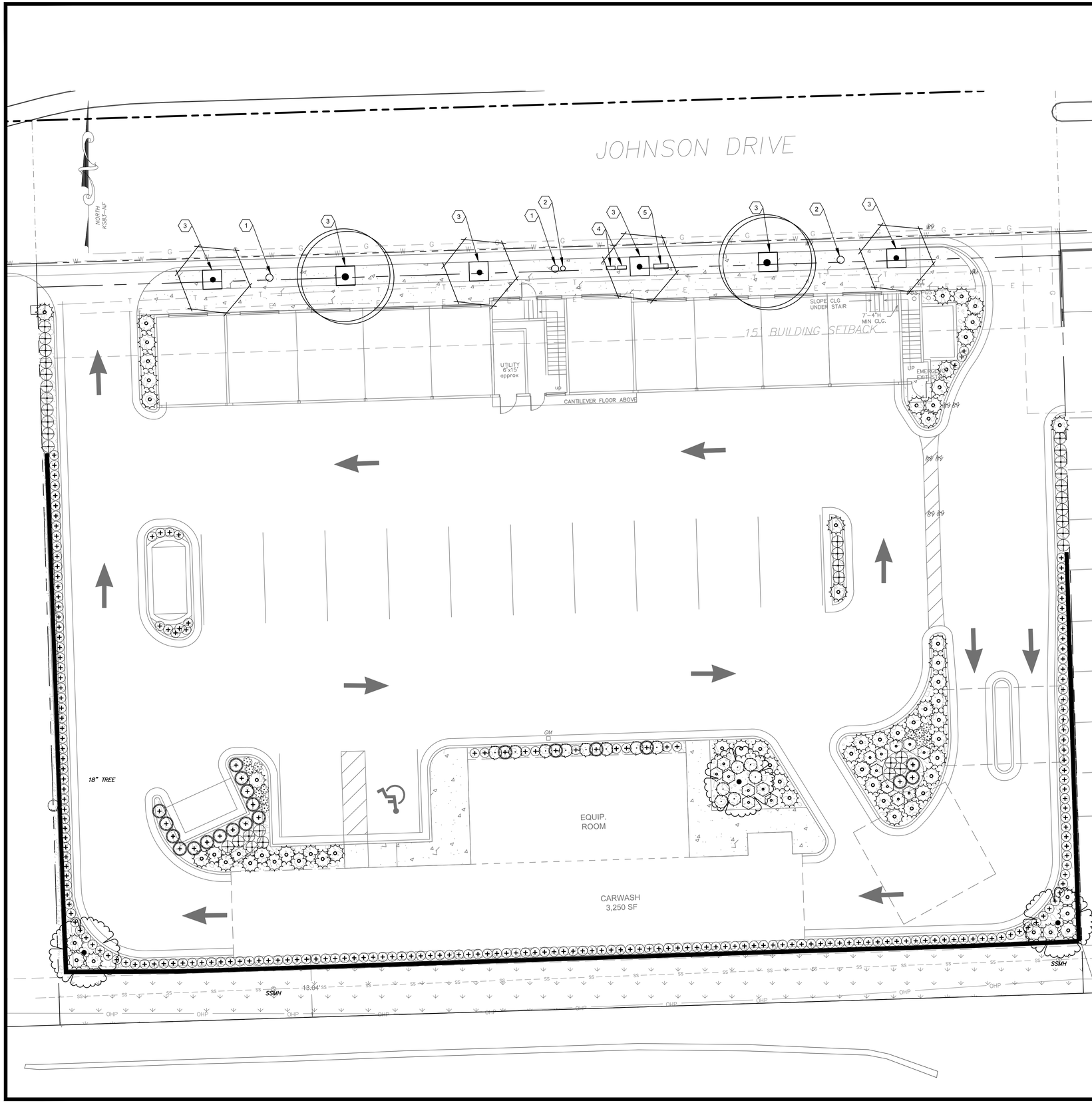

PLANT SCHEDULE

TREES	QTY	BOTANICAL NAME / COMMON NAME	CONT	CAL
	2	Acer truncatum / Shantung Maple	25 gal	2"Cal
	3	Malus x `Velvetcole` / Velvet Pillar	B & B	2"Cal
	4	Ulmus parvifolia 'Everclear' ' / Everclear Lacebark Elm	25 gal	2"Cal

SHRUBS	QTY	BOTANICAL NAME / COMMON NAME	CONT	PLANT HT
	14	Buxus x `Green Velvet` / Boxwood	5 gal	
	13	Hemerocallis x `Little Business` / Little Business Daylily	1 gal	
	21	Juniperus chinensis 'Hooks' / Hooks Juniper FOR PLANTING SPECIFICATIONS SEE DETAIL 803 & 804, SHEET L2.1	B & B	6` Ht
	66	Juniperus virginiana `Grey Guardian` / Greguard Juniper	5 gal	3` height
	35	Panicum virgatum `Shenandoah` / Switch Grass FOR PLANTING SPECIFICATIONS SEE DETAIL 803 & 804, SHEET L2.1	1 gal	
	16	Viburnum opulus `Nanum` / Dwarf European Viburnum FOR PLANTING SPECIFICATIONS SEE DETAIL 803 & 804, SHEET L2.1	5 gal	1.5` ht.
	211	Vinca major / Periwinkle	1 gal	

GROUND COVERS	QTY	BOTANICAL NAME / COMMON NAME	CONT
	2,194 sf	Festuca arundinacea `Heatwave+ Blend` / Heatwave+ Blend of Tall Fescue 5% Kelly Bluegrass 95% - 3 specicesTurf Fescue (Covenant II, Avenger, Garrison)	seed

GROUND COVERS	QTY	BOTANICAL NAME / COMMON NAME	SIZE	DEPTH
	24 cy	Buffalo River Rock	1" -3" rock	3" deep

SITE DATA

	Data	Required	Provided
Site Area	0.76		
Site Trees			
1 tree/3,000 SF of landscaped open space	4,846.05	1.62	2
Street Trees			
1 tree/40 LF of street frontage	215	5.375	6
Parking Lot Trees			
1 tree/20 cars	12	0.6	1

HARDSCAPE NOTES:

1. STREET LIGHTS 60' O.C. (SENTRY SCP LUMINAIRE / NEW YORK BLACK POST WITH TWO KEYSTONE RIDGE BASKET PLANTER PER POLE
2. TRASH RECEPTACLE (BLACK 36 GALLON STEELSITES RB-36 BY VICTOR STANLEY)
3. STREET TREES (30' O.C. WITH A NEENAH FOUNDRY TREE GRATE #R-8726
4. TWO BIKE LOOPS (CREATIVE PIPE: BLACK INVERTED "U" BIKE RACK)
5. BENCH (BLACK 72" SCARBOROUGH BY LANDSCAPE FORMS)

LANDSCAPE NOTES:

1. THE CONTRACTOR SHALL VERIFY AND COORDINATE ALL FINAL GRADE WITH THE LANDSCAPE ARCHITECT AND OR DESIGN TEAM PRIOR TO COMPLETION.
2. LOCATION AND PLACEMENT OF ALL PLANT MATERIAL SHALL BE COORDINATE WITH THE LANDSCAPE ARCHITECT PRIOR TO INSTALLATION.
3. LOCATION OF ALL UTILITIES ARE APPROXIMATE, THE CONTRACTOR SHALL FIELD VERIFY LOCATIONS PRIOR TO COMMENCEMENT OF CONSTRUCTION OPERATIONS.
4. REFER TO CIVIL DRAWINGS FOR ALL GRADING AND BERMING, EROSION CONTROL, STORM DRAINAGE, UTILITIES AND SITE LAYOUT.
5. PLANT QUANTITIES ARE FOR INFORMATION ONLY DRAWING SHALL PREVAIL IF CONFLICT OCCURS. CONTRACTOR IS RESPONSIBLE FOR CALCULATING OWN QUANTITIES AND BID ACCORDINGLY.
6. THE CONTRACTOR IS TO NOTIFY LANDSCAPE ARCHITECT AFTER STAKING IS COMPLETE AND BEFORE PLANT PITS ARE EXCAVATE.
7. TREE LOCATIONS IN AREAS ADJACENT TO DRIVES, WALKS, WALLS AND LIGHT FIXTURES MAY BE FIELD ADJUSTED AS APPROVED BY LANDSCAPE ARCHITECT.
8. THE CONTRACTOR SHALL REPORT SUBSURFACE SOIL OR DRAINAGE PROBLEMS TO THE LANDSCAPE ARCHITECT.
9. THE PLAN IS SUBJECT TO CHANGES BASED ON PLANT SIZE AND MATERIAL AVAILABILITY. ALL CHANGES OR SUBSTITUTIONS MUST BE APPROVED BY THE CITY OF MISSION, KANSAS AND THE LANDSCAPE ARCHITECT.
10. ALUMINUM LANDSCAPE EDGING TO BE USED ON ALL LANDSCAPE BEDS ABUTTING TURF AREAS AS NOTED ON LANDSCAPE PLANS.
11. LANDSCAPE CONTRACTOR IS TO BE RESPONSIBLE FOR WATERING ALL PLANT MATERIAL UNTIL THE TIME THAT A PERMANENT WATER SOURCE IS READY.
12. THE CONTRACTOR SHALL SHOW PROOF OF PROCUREMENT, SOURCES, QUANTITIES AND VARIETIES FOR ALL SHRUBS, PERENNIALS ORNAMENTAL GRASSES AND ANNUALS WITHIN 21 DAYS FOLLOWING THE AWARD OF THE CONTRACT.
13. CONTRACTOR SHALL PROVIDE FULL MAINTENANCE FOR NEWLY LANDSCAPED AREAS FOR A PERIOD OF 30 DAYS AFTER THE DATE OF FINAL ACCEPTANCE. AT THE END OF THE MAINTENANCE PERIOD, A HEALTHY, WELL-ROOTED, EVE-COLORED, VIABLE TURF AND LANDSCAPED AREA MUST BE ESTABLISHED. THE LANDSCAPED AREAS SHALL BE FREE OF WEEDS, OPEN JOINTS, BARE AREAS AND SURFACE IRREGULARITIES.
14. LANDSCAPE CONTRACTOR SHALL PROVIDE ROCK MULCH SAMPLE TO OWNER FOR APPROVAL.

NO.	REVISION DESCRIPTION	BY	DATE

BHC RHODES
Civil Engineering • Surveying • Utilities
7101 College Blvd., Suite 400
Overland Park, Kansas 66210
p. (913) 663-1900 f. (913) 663-1633
BHC RHODES is a trademark of Burgerett Hemmerich & Company, P.A.

10' 5' 0' 10'
GRAPHIC SCALE: 1" = 10'

EMC ENGINEERING SERVICES, INC.
1344 US Hwy 19S, Suite A
Leesburg, GA 31763
Ph: (229) 435-6133
Fax: (229) 439-7979
albany@emc-eng.com
www.emc-eng.com
CIVIL
MARINE
ENVIRONMENTAL
OFFICE LOCATIONS: ALBANY, ATLANTA, AUGUSTA, BRUNSWICK, COLUMBUS, SAVANNAH, STATESBORO, AND VALDOSTA

LANDSCAPE PLAN

TIDAL WAVE AUTO SPA

PROPERTY ID #: KP69500001 0003
MISSION, JOHNSON COUNTY, KANSAS
Prepared for:
SHJ CONSTRUCTION GROUP

PROJECT NO.:	17-6044
DRAWN BY:	NAB
DESIGNED BY:	NAB
SURVEYED BY:	CFSE
SURVEY DATE:	05/30/2017
CHECKED BY:	BHB
SCALE:	1" = 10'
DATE:	05/14/2018

SHEET
C-09
OF 17

SITE LIGHTING FIXTURE SCHEDULE								
Symbol	Label	QTY	Manufacturer	Catalog Number	Description	Lamp	Lumens per Lamp	Wattage
	WM1	5	WILLIAMS OUTDOOR	WPTZ-L38-750	MEDIUM TRAPEZOID WALLPACK		3828.931	41.57
	SP1	6	Cree Inc	OSQ-A-xx-4ME-B-57K-ULxxxxx w/OSQ-BLSMF CONFIGURED FROM OSQ-A-xx-4ME-U-57K-ULxxxxx w/OSQ-BLSLF	Cree OSQ Series Area Luminaire, Type IV Medium w/ Backlight Shield, B Input Power Designator, 5700K	CONFIGURED FROM MDA	8950.426	86

Statistics						
Description	Symbol	Avg	Max	Min	Max/Min	Avg/Min
Parking Lot	✕	- fc	- fc	- fc	-:-	-:-
Parking Lot to Boundary	+	- fc	- fc	- fc	N/A	N/A
Property Line	+	- fc	- fc	- fc	N/A	N/A

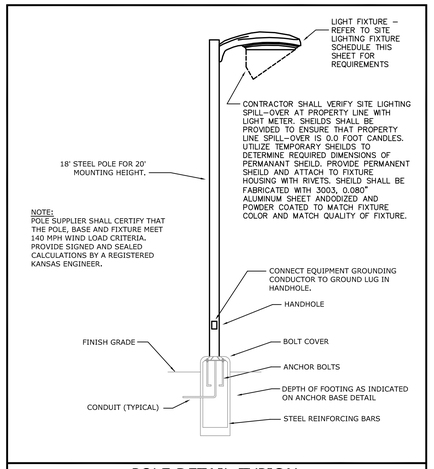

POLE DETAIL-TYPICAL
NOT TO SCALE

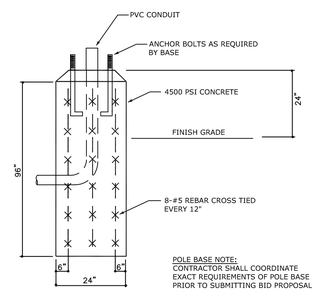

POLE ANCHOR BASE DETAIL
NOT TO SCALE

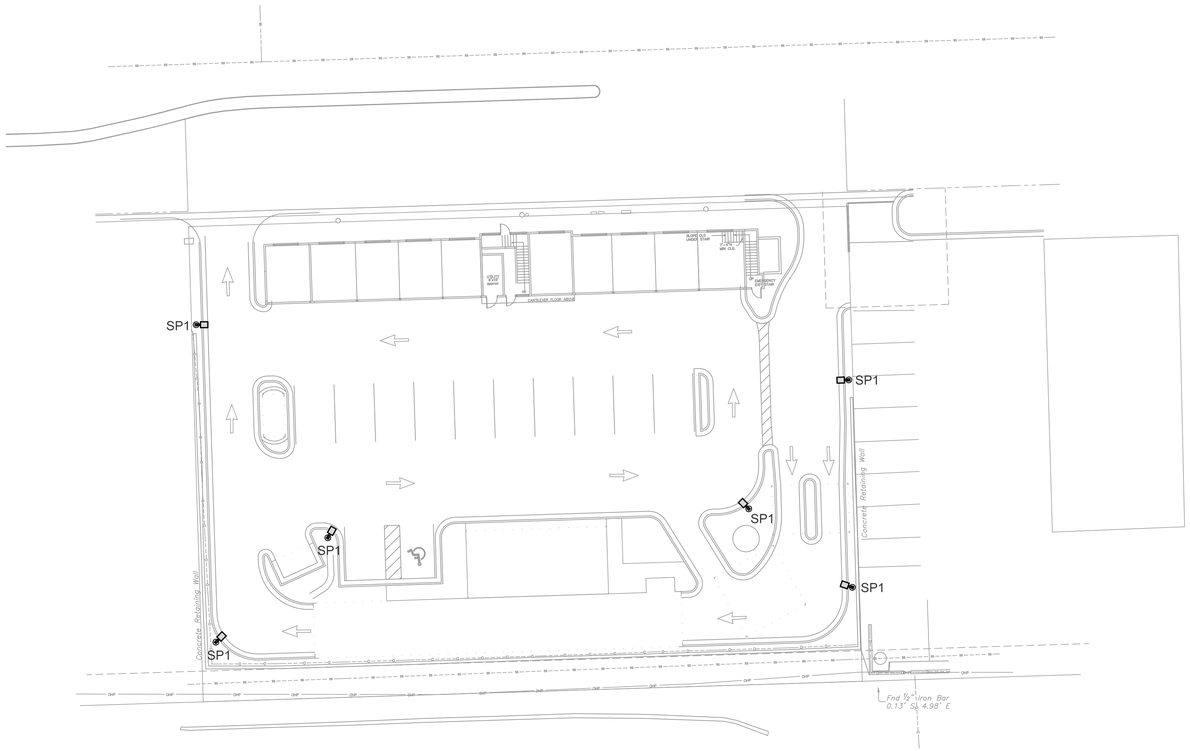

SITE PHOTOMETRIC PLAN

SCALE — 1"=20'-0"

ROBERT L. CONNORS, P.E.
KANSAS LICENSE #23160

12730 HIGHWAY 92 E
WOODSTOCK, GA 30188

PROJECT MANAGER: STEPHEN EDWARDS
PHONE 678-466-7433

A NEW
TIDAL WAVE AUTO SPA
CAR WASH FACILITY
MISSION, KANSAS

DATE: MAY 10, 2018 | PROJECT | DRAWN BY: SPE

TIDAL WAVE AUTO SPA

SHEET:
E1.2
3 OF: 4

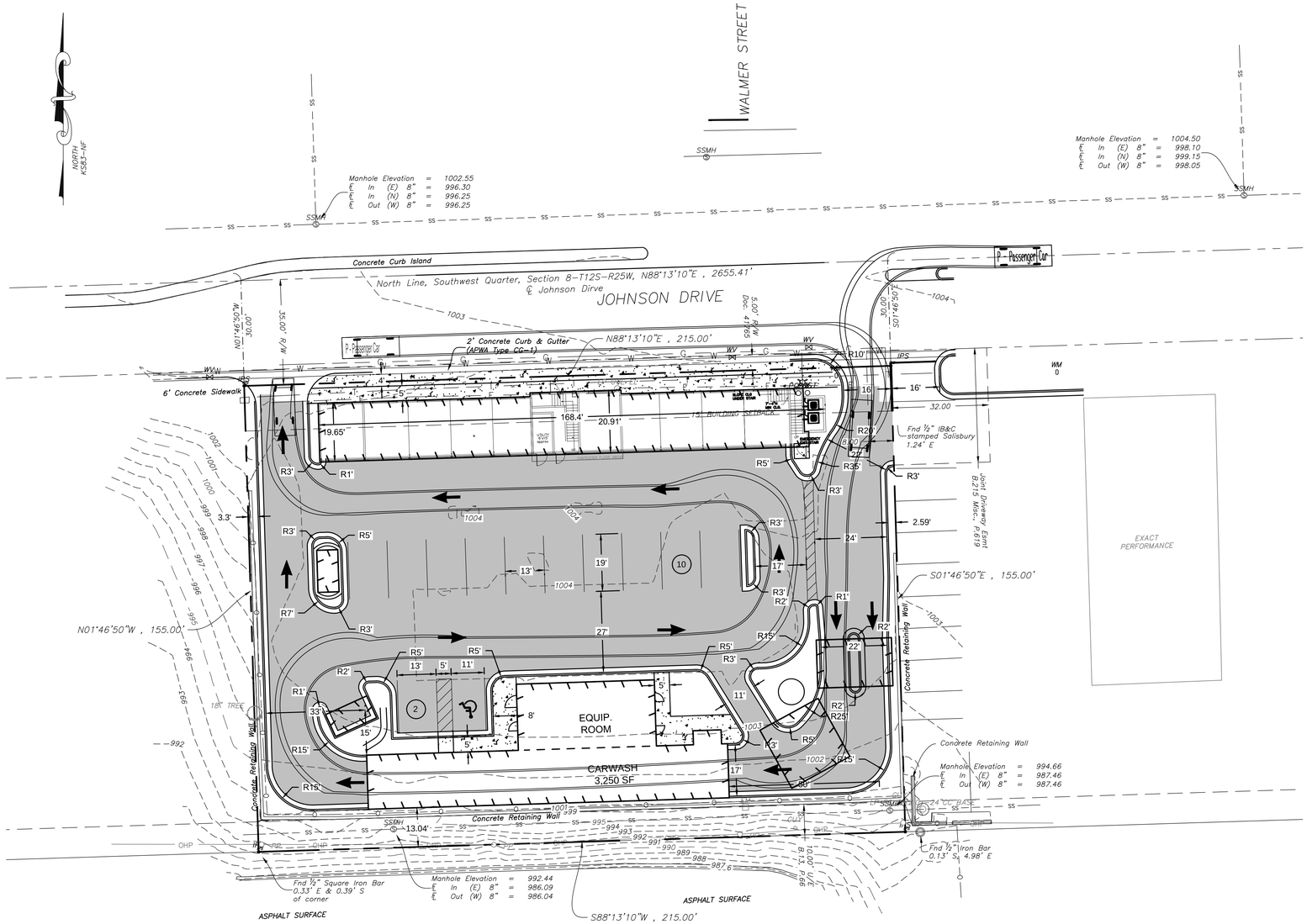

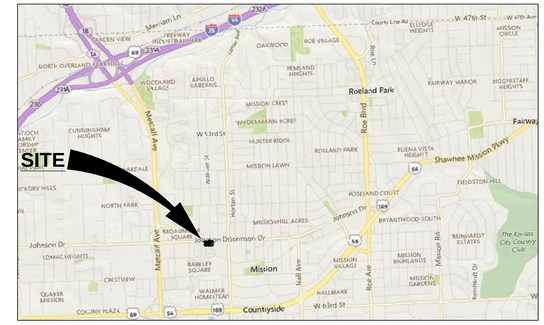

VICINITY MAP

N.T.S.

OWNER INFORMATION

OWNER: CSTORE INVESTORS TOO, LLC

ADDRESS: 700 W 47TH ST, KANSAS CITY, MO 64118

APPLICANT INFORMATION

APPLICANT: TW MACON, LLC (d.b.a. TIDAL WAVE AUTO SPA)

ADDRESS: 124 THOMPSON STREET, THOMASTON, GEORGIA 30286

PHONE #: 770-271-5646

SITE INFORMATION

ADDRESS: 6501 JOHNSON DR., MISSION, KANSAS 66202

PROPERTY AREA: ±0.76 AC

PROPERTY ZONING: CP-2B

BUILDING SETBACKS:
FRONT: 0'-10'
SIDE: 0'
REAR: 0'

PARKING NOTE

PARKING REQUIRED:
3.5 SPACE PER 1,000 SF
(3,250 / 1,000) X 3.5 = 12 SPACES

PARKING PROVIDE:
11 STANDARD SPACES
+ 1 HANDICAPPED SPACES
12 TOTAL SPACES

HATCH LEGEND:

CONCRETE PAVEMENT

EXISTING CONCRETE SIDEWALK

PROPOSED CONCRETE SIDEWALK

GENERAL NOTE:

1. ALL DEVELOPMENTS SHALL CONFORM TO THE REQUIREMENTS OF THE CITY OF MISSION'S STORM WATER MANAGEMENT CRITERIA INCORPORATED BY REFERENCE HEREIN.

STORMWATER NOTES:

EXISTING CONDITION

PERVIOUS AREA = ± 0.05 AC (7%)

IMPERVIOUS AREA = ± 0.71 AC (93%)

PROPOSED CONDITION

PERVIOUS AREA = ± 0.08 AC (11%)

IMPERVIOUS AREA = ± 0.68 AC (89%)

Kansas 811
Know what's below. Call before you dig.

NO.	REVISION DESCRIPTION	BY	DATE

KANSAS
EMC ENGINEERING SERVICES,INC.
No. E-2814
CERTIFICATION OF AUTHORIZATION

20' 10' 0' 20'
GRAPHIC SCALE: 1" = 20'

EMC ENGINEERING SERVICES, INC.
1344 US Hwy 19S, Suite A
Leesburg, GA 31763
Ph: (229) 435-6133
Fax: (229) 435-7539
albany@emc-eng.com
www.emc-eng.com
CIVIL
MARINE
ENVIRONMENTAL
OFFICE LOCATIONS: ALBANY, ATLANTA, AUGUSTA, BRUNSWICK, COLUMBUS, SAVANNAH, STATESBORO, AND VALDOSTA

CAR AUTO TURN TEMPLATE

TIDAL WAVE AUTO SPA

PROPERTY ID #: KP69500001 0003
MISSION, JOHNSON COUNTY, KANSAS
Prepared for:
SHJ CONSTRUCTION GROUP

PROJECT NO.:	17-6044
DRAWN BY:	DEM
DESIGNED BY:	DEM
SURVEYED BY:	CFSE
SURVEY DATE:	05/30/2017
CHECKED BY:	BHB
SCALE:	1" = 20'
DATE:	04/11/2018

SHEET
C-02
OF 5

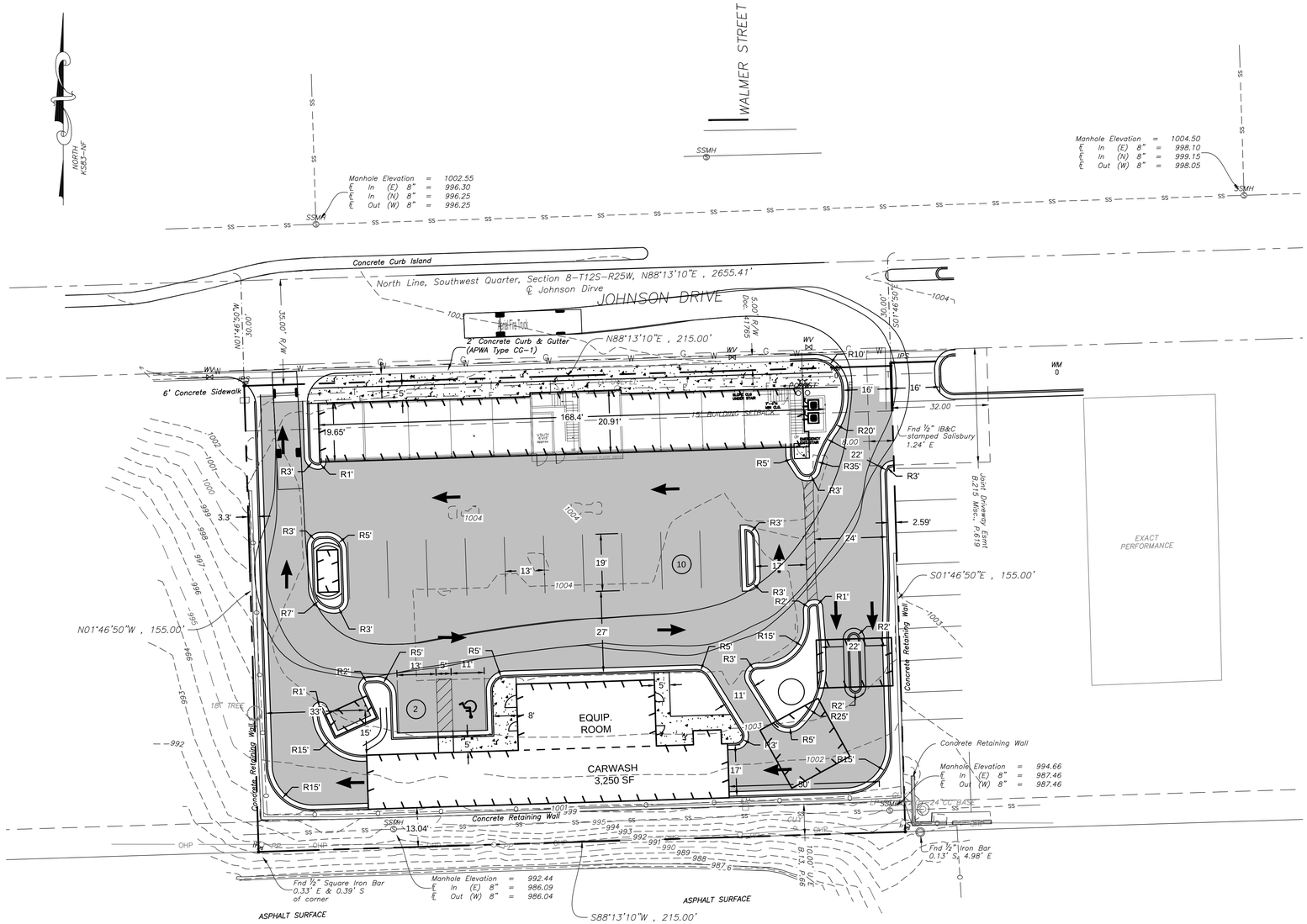

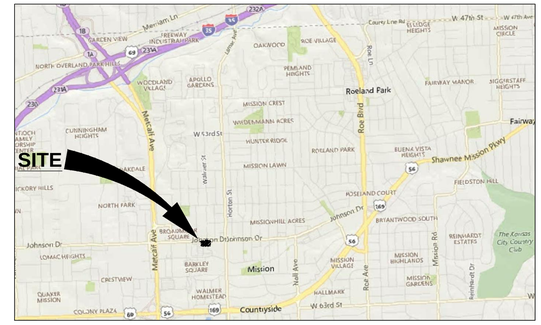

VICINITY MAP

N.T.S.

OWNER INFORMATION

OWNER: CSTORE INVESTORS TOO, LLC

ADDRESS: 700 W 47TH ST, KANSAS CITY, MO 64118

APPLICANT INFORMATION

APPLICANT: TW MACON, LLC (d.b.a. TIDAL WAVE AUTO SPA)

ADDRESS: 124 THOMPSON STREET, THOMASTON, GEORGIA 30286

PHONE #: 770-271-5646

SITE INFORMATION

ADDRESS: 6501 JOHNSON DR., MISSION, KANSAS 66202

PROPERTY AREA: ±0.76 AC

PROPERTY ZONING: CP-2B

BUILDING SETBACKS:
FRONT: 0'-10'
SIDE: 0'
REAR: 0'

PARKING NOTE

PARKING REQUIRED:
3.5 SPACE PER 1,000 SF
(3,250 / 1,000) X 3.5 = 12 SPACES

PARKING PROVIDE:
11 STANDARD SPACES
+ 1 HANDICAPPED SPACES
12 TOTAL SPACES

HATCH LEGEND:

CONCRETE PAVEMENT

EXISTING CONCRETE SIDEWALK

PROPOSED CONCRETE SIDEWALK

GENERAL NOTE:

1. ALL DEVELOPMENTS SHALL CONFORM TO THE REQUIREMENTS OF THE CITY OF MISSION'S STORM WATER MANAGEMENT CRITERIA INCORPORATED BY REFERENCE HEREIN.

STORMWATER NOTES:

EXISTING CONDITION

PERVIOUS AREA = ± 0.05 AC (7%)

IMPERVIOUS AREA = ± 0.71 AC (93%)

PROPOSED CONDITION

PERVIOUS AREA = ± 0.08 AC (11%)

IMPERVIOUS AREA = ± 0.68 AC (89%)

Kansas 811
Know what's below. Call before you dig.

NO.	REVISION DESCRIPTION	BY	DATE

KANSAS
EMC ENGINEERING SERVICES,INC.
No. E-2814
CERTIFICATION OF AUTHORIZATION

20' 10' 0' 20'
GRAPHIC SCALE: 1" = 20'

EMC ENGINEERING SERVICES, INC.
1344 US Hwy 19S, Suite A
Leesburg, GA 31763
Ph: (229) 435-6133
Fax: (229) 435-7539
albany@emc-eng.com
www.emc-eng.com
CIVIL
MARINE
ENVIRONMENTAL
OFFICE LOCATIONS: ALBANY, ATLANTA, AUGUSTA, BRUNSWICK, COLUMBUS, SAVANNAH, STATESBORO, AND VALDOSTA

FIRE TRUCK AUTO TURN TEMPLATE

TIDAL WAVE AUTO SPA

PROPERTY ID #: KP69500001 0003
MISSION, JOHNSON COUNTY, KANSAS
Prepared for:
SHJ CONSTRUCTION GROUP

PROJECT NO.:	17-6044
DRAWN BY:	DEM
DESIGNED BY:	DEM
SURVEYED BY:	CFSE
SURVEY DATE:	05/30/2017
CHECKED BY:	BHB
SCALE:	1" = 20'
DATE:	04/11/2018

SHEET
C-03
OF 5

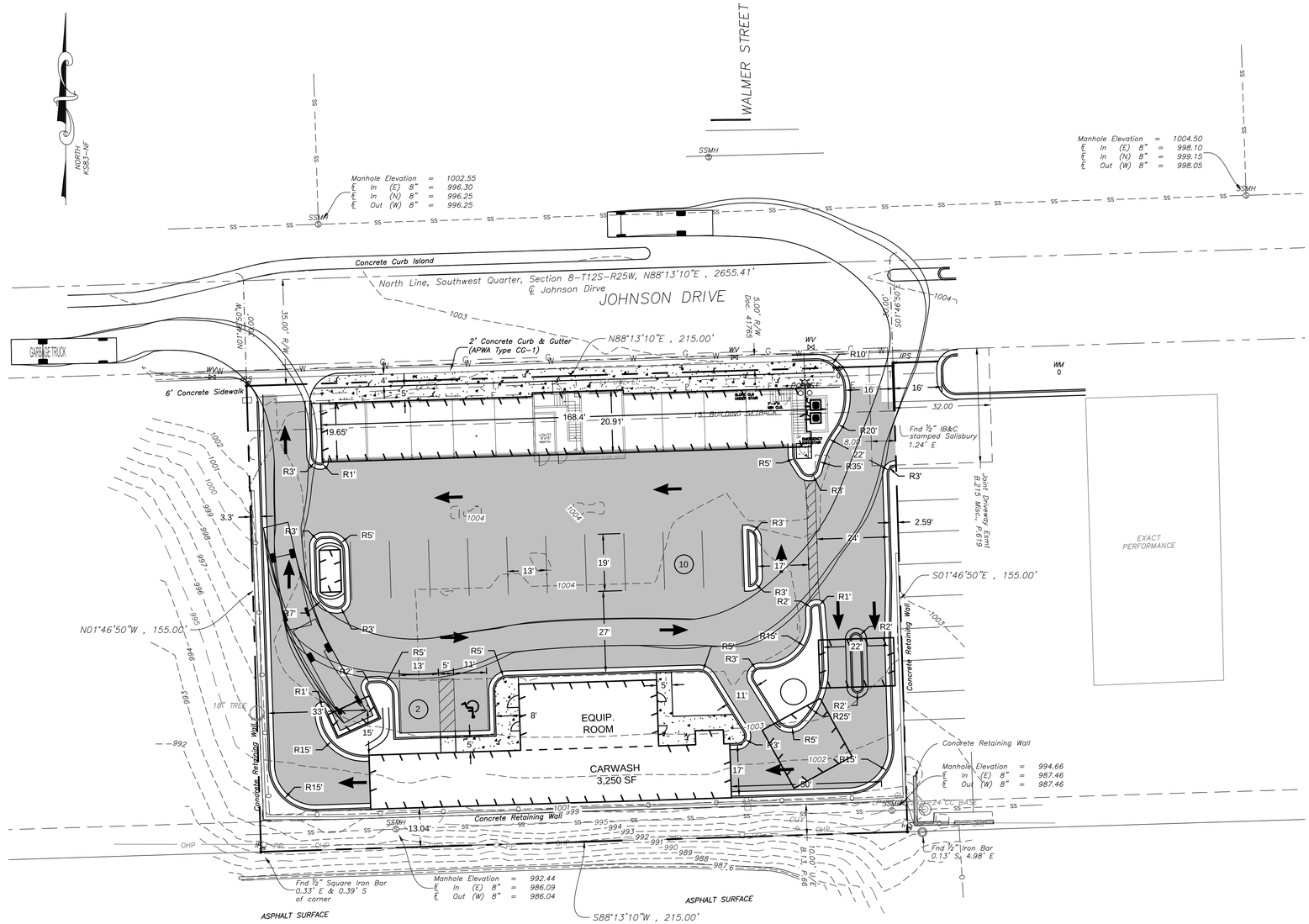

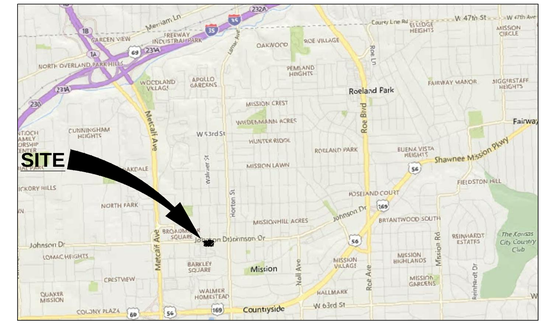

VICINITY MAP

N.T.S.

OWNER INFORMATION

OWNER: CSTORE INVESTORS TOO, LLC

ADDRESS: 700 W 47TH ST, KANSAS CITY, MO 64118

APPLICANT INFORMATION

APPLICANT: TW MACON, LLC (d.b.a. TIDAL WAVE AUTO SPA)

ADDRESS: 124 THOMPSON STREET, THOMASTON, GEORGIA 30286

PHONE #: 770-271-5646

SITE INFORMATION

ADDRESS: 6501 JOHNSON DR., MISSION, KANSAS 66202

PROPERTY AREA: ±0.76 AC

PROPERTY ZONING: CP-2B

BUILDING SETBACKS:
FRONT: 0'-10'
SIDE: 0'
REAR: 0'

PARKING NOTE

PARKING REQUIRED:
3.5 SPACE PER 1,000 SF
(3,250 / 1,000) X 3.5 = 12 SPACES

PARKING PROVIDE:
11 STANDARD SPACES
+ 1 HANDICAPPED SPACES
12 TOTAL SPACES

HATCH LEGEND:

CONCRETE PAVEMENT

EXISTING CONCRETE SIDEWALK

PROPOSED CONCRETE SIDEWALK

GENERAL NOTE:

1. ALL DEVELOPMENTS SHALL CONFORM TO THE REQUIREMENTS OF THE CITY OF MISSION'S STORM WATER MANAGEMENT CRITERIA INCORPORATED BY REFERENCE HEREIN.

STORMWATER NOTES:

EXISTING CONDITION	PROPOSED CONDITION
PERVIOUS AREA = ± 0.05 AC (7%)	PERVIOUS AREA = ± 0.08 AC (11%)
IMPERVIOUS AREA = ± 0.71 AC (93%)	IMPERVIOUS AREA = ± 0.68 AC (89%)

Kansas 811
Know what's below. Call before you dig.

NO.	REVISION DESCRIPTION	BY	DATE

KANSAS
EMC ENGINEERING SERVICES,INC.
No. E-2814
CERTIFICATION OF AUTHORIZATION

20' 10' 0' 20'
GRAPHIC SCALE: 1" = 20'

EMC ENGINEERING SERVICES, INC.
1344 US Hwy 19S, Suite A
Leesburg, GA 31763
Ph: (229) 435-6133
Fax: (229) 435-7139
albany@emc-eng.com
www.emc-eng.com
CIVIL
MARINE
ENVIRONMENTAL
OFFICE LOCATIONS: ALBANY, ATLANTA, AUGUSTA, BRUNSWICK, COLUMBUS, SAVANNAH, STATESBORO, AND VALDOSTA

GARBAGE TUCK AUTO TURN TEMPLATE

TIDAL WAVE AUTO SPA

PROPERTY ID #: KP69500001 0003
MISSION, JOHNSON COUNTY, KANSAS
Prepared for:
SHJ CONSTRUCTION GROUP

PROJECT NO.:	17-6044
DRAWN BY:	DEM
DESIGNED BY:	DEM
SURVEYED BY:	CFSE
SURVEY DATE:	05/30/2017
CHECKED BY:	BHB
SCALE:	1" = 20'
DATE:	04/11/2018

SHEET
C-04
OF 5